SPACE • AUTOMOTIVE • DOMESTIC • INTERNET

No. 95
FULL SOR
NOVEMBER 1995 • £2.25
Printed in the United Kingdom

ELECTRONICS

The Maplin Magazine

Britain's Best Selling Electronics Magazine

G G 151295
BRENTFORD SQUARE
NEWS PH 878 1882
03 01 £6.50

BT Tower – the in-depth technological story!

No more stumbling around in the dark to reach your front door – build the practical Car Headlights Delay project!

Focus on Alternative Space Propulsion methods – Are they more efficient?

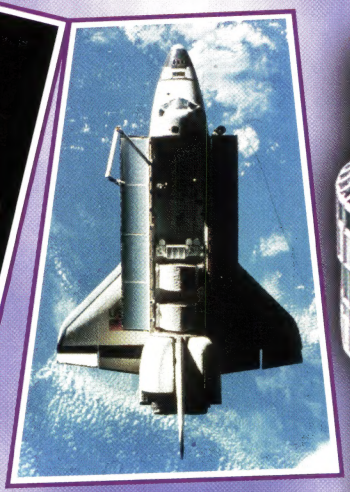

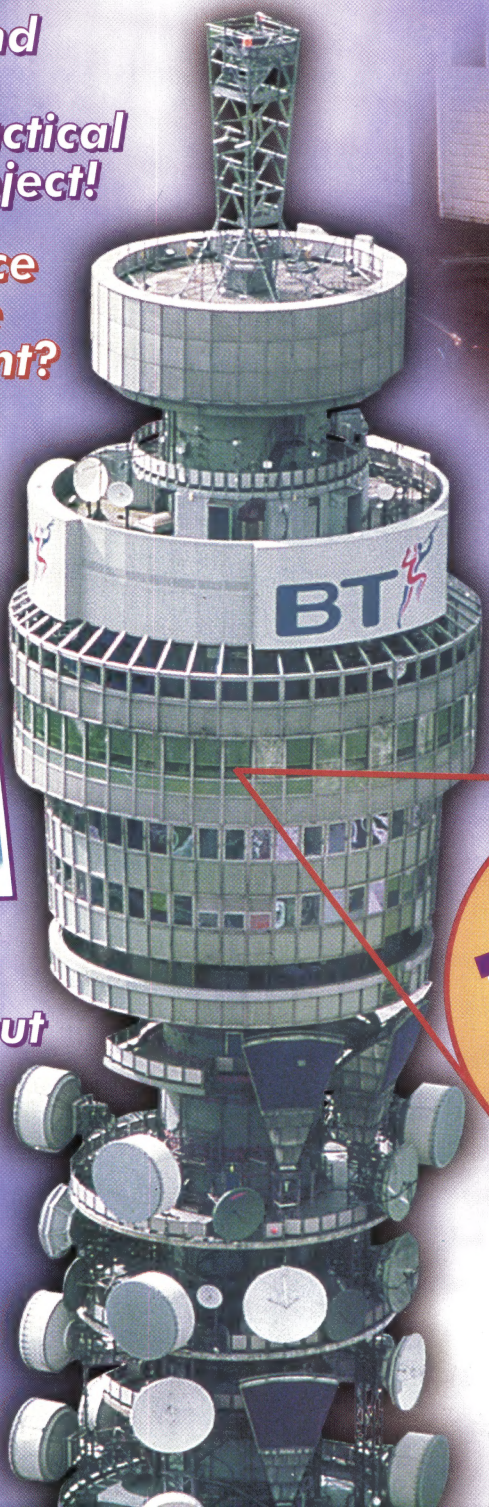

Be aware of a mains power cut the moment it happens with a Mains Failure Alarm project!

The essential kit for TV/Video experimentation – The Video Line Selector and much, much more!

BT TOWER competition

See page 76 for details

9 770957 545084 11

Don't suffer from the 'Motorway Miseries'!

Anyone who has ever been held-up in a motorway jam, knows how stressful and annoying it can be . . . especially when you've an important schedule to keep!

Now, at last, you can save time, money *and your sanity*, by timing and planning your journey before you leave, and constantly adjust your route as you drive, using the most up-to-date traffic information available.

The Traffic*master* YQ receives traffic flow data from a national network of traffic sensors covering every UK motorway and 400 miles of interconnecting trunk roads.

Your YQ also gives you useful information including the latest weather reports, news headlines, plus details of long-term roadworks and other potential delays throughout the UK motorway network.

In addition, you can use your YQ as a personal messaging system – an extremely valuable service, at no extra cost to you (incoming callers pay a small call charge).

EASY TO INSTALL AND USE

The Traffic*master* YQ can be totally portable, if required, with a battery life of up to 8 hours.

In your home or office, your YQ can run from an optional executive desk stand which recharges the battery as well.

In your car, you can mount your YQ anywhere that's safe and convenient for you to use it, and power it from the cigar lighter.

The straightforward controls allow you to call up increasingly local areas of the motorway network on separate 'screens', so you can 'zoom in' and see exactly where and what is causing any traffic problems.

And you can call up a host of other information simply by pressing the text keys.

Your Traffic*master* YQ comes complete with everything you need to mount it in your car, and costs just **£149.99. Carriage £6.00#. Order Code 95000**.

Your first month's traffic information is free. Then all you have to do is choose either a 6 or 12 month information key to renew your subscription to the UK's most up-to-date traffic information service.

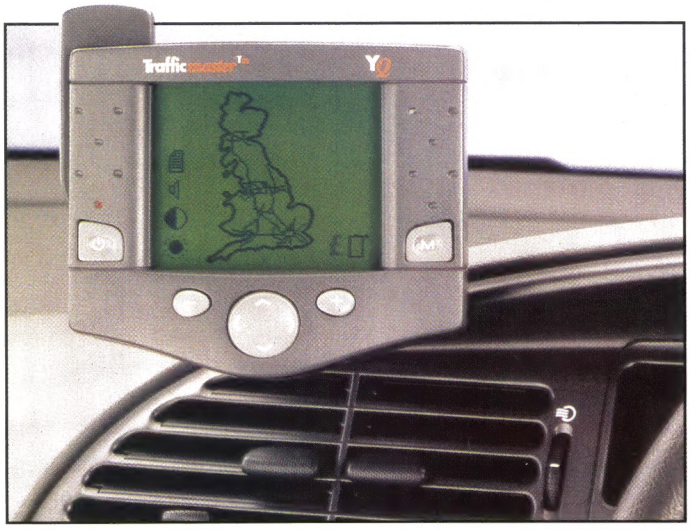

You'll find the Traffic*master* YQ costs less than the mobile telephone you use to tell people when you are stuck in a jam, and just one missed meeting or connection could cost you many times more!

6 month key, Order Code 95001, £59.99. Carriage £2.30#
12 month key, Order Code 95002, £109.99. Carriage £4.00#
Desk stand, Order Code 95003, £39.99. Carriage £1.60#
Leather carry case, Order Code 95004, £19.99.

The Traffic*master* YQ is the only commercially available system that gives you a total, live picture of hold-ups and problems, and it's **AVAILABLE NOW FROM MAPLIN ELECTRONICS.**

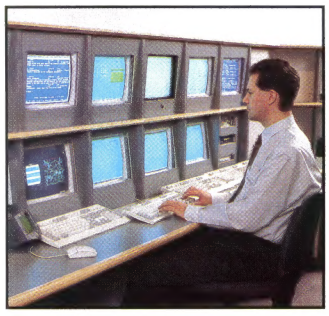

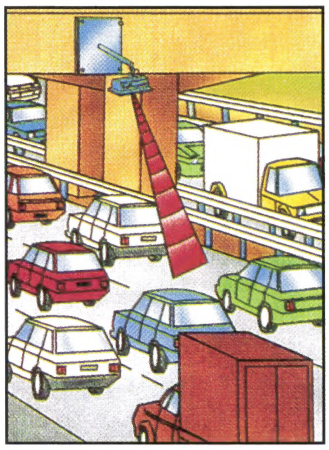

HOW TO ORDER

Phone the Credit Card Hotline on 0800 136 156 NOW, or send a crossed cheque made payable to Maplin Electronics plc, P.O. Box 3, Rayleigh, Essex, SS6 8LR (please quote Order Codes and your name and address), or visit your local Maplin Electronics store. For details of your nearest store phone (01702) 552911.

MAPLIN
ELECTRONICS AND BEYOND

All items are subject to availability. Prices include VAT and may change after 29th February 1996.
Maximum carriage charge per order is £6.00. Handling charge £1.55 per order. Trafficmaster is a registered trade mark of Trafficmaster plc. E&OE.

Introducing the 'perfect remedy' Traffic*master*™ YQ

NOVEMBER 1995
VOL 14. No. 95

IN THIS ISSUE...

PROJECTS *FOR YOU TO BUILD!*

DOOR CHIME 4

Replace your tired and harsh-sounding old mechanical doorbell with this smart-looking, IC-based project which provides a pleasant two-tone 'ding-dong' chime, the note of which can be adjusted for pitch and speed. Versatile power supply capability and built-in charging circuitry allows the unit to be run from a conventional mains doorbell transformer and/or rechargeable Ni-Cd or normal batteries.

VIDEO LINE SELECTOR 24

An essential piece of kit for TV and video engineers or experimenters, this useful project allows you to monitor on a standard oscilloscope, individual, selected lines of TV video information, rather than having to see all the lines' signals at once. This allows for easy adjustment or trouble-shooting, so that you can obtain the optimum performance from your TV set.

MAINS FAILURE ALARM 40

Build this useful project, and be warned of the next mains supply power cut the moment it happens, or even after the mains supply has been re-established, so that you have ample time to take action to avoid a freezer-full of defrosted provisions, breaches in your building's security, loss of computer data, or to remind you to correct the video clock so as to record your favourite programme!

CAR HEADLIGHTS DELAY 48

This is a project to build and install into your car now, before the long dark nights of winter begin to set in. This clever unit enables the headlights to be switched on for a preset delay period on exiting the vehicle, so that you can see clearly along your intended path to avoid unseen hazards such as icy patches and unexpected obstacles.

FEATURES *ESSENTIAL READING!*

ALTERNATIVE SPACE PROPULSION 8

Douglas Clarkson takes a break from peering through his telescope at distant planets, to aim a sharp focus instead at the science behind blasting hundreds of tonnes of state-of-the-art space exploration vehicles and equipment into orbit, and how this may be achieved more efficiently in the future by means of utilising alternative means of propulsion.

STEPPER MOTORS 14

Take a precisely-measured step this way, and read this steadily moving article by Stephen Waddington, who avoids side-stepping the issue, to bring you all the angles you need to know regarding stepper motors, how they work, steps to take on how to control them, and their present and future applications – it will put you in a spin!

LOW DISTORTION OPERATION OF LM358 34

Discover how to configure the popular LM358 operational amplifier within circuits to allow its maximum performance to be realised, whilst minimising the distortion under amplification conditions. John Woodgate explains all in this informative article.

THE ART OF ELECTRONIC MUSIC 53

In the final instalment of this melodious series charting the development of music synthesizers, Richard Wentk investigates methods of achieving accurate simulations of real instruments, including techniques such as physical modelling, Fourier analysis and re-synthesis, and morphing (nothing to do with cheeky modelling clay figurines!).

GUIDE TO MODERN DIGITAL ICs 58

The third part of this instructive series from Ray Marston provides essential details for circuit designers using the TTL family of logic ICs, dealing with basic usage rules, power supply requirements, and how to go about achieving the correct interfacing of inputs/outputs and between different logic families.

MAGNETIC DISKS AND NEW APPLICATIONS 62

This article from Frank Booty describes how the familiar magnetic storage computer disks that we all know and love (!) are set to remain in use for quite a while yet, fighting off challenges for supremacy in the mainstream market from the likes of PCMCIA cards and chip memories, as new applications are being 'diskovered' for this format of data storage.

RS-232 EXPLAINED 67

This useful and informative article from Ian Poole examines the connecting links behind one of the world's most widely used data cabling formats, that is, the ubiquitous RS-232C standard, and explores the limits of its operating capacity and speed. Useful information is also included regarding the recently introduced further specifications, RS-422 and RS-423.

BT TOWER 74

Reach dizzy new heights of technological enlightenment when you read this lofty article by Alan Simpson, describing the world-famous BT Tower in London. Plus, having read the article, you can enter a superb competition to give you the chance for you and your partner to have lunch in the revolving restaurant at the top of the tower, for an unrivalled outlook over the whole of London, and a slap-up meal!

REGULARS *NOT TO BE MISSED!*

ABOUT THIS ISSUE...	2	HOW TO SUBSCRIBE	38	@INTERNET	72
TECHNOLOGY WATCH	3	WHAT'S ON DIARY DATES	39	NEXT ISSUE	76
NEWSAGENT'S COUPON	13	AIR YOUR VIEWS	46	NEW BOOKS	80
STRAY SIGNALS	23	NEWS REPORT	64		
ORDER COUPON	37	CLASSIFIED ADVERTS	71		

ABOUT THIS ISSUE . . .

Hello and welcome to this month's issue of *Electronics!* We have as usual, a fine collection of features and projects for you to read and build.

LIVE '95 Winners

We are pleased to announce our lucky prize winners for the LIVE '95 Contest who each received a pair of tickets: Richard Allan, Inverness, A. Brant, High Wycombe, S. R. Burgess, Swindon, David Chadderton, Selly Oak, Birmingham, D. P. Pibworth, Reading, Berks, P. D. Franks, Fareham, Hants, Ben Haigh, Newton Hall, Co. Durham, T. Dunn, Upper Norwood, London, J. P. Guillebaud, Oxford, Simon Rous, Whitstable, Kent, Narshi Solanki, Upton Park, London, Paul Turner, Aberthaw, Barry.

Pentium Computer Winners

We are also pleased to announce the two lucky prize winners of our Mini Catalogue Pentium Computer Contest: Wayne Bebb, Pen-y-graig, Tonypandy, South Wales, is shown here being presented with his Pentium Computer by Clive Noble, Manager of our Cardiff shop. Wayne is 20 years of age and works at

Hensol Hospital near Pontyclun, South Wales and plays badminton. His time will now be occupied learning how to operate his prize.

Our other lucky Pentium prize winner is Mrs. Creaner of Newry, Co. Down, Northern Ireland, who is being presented with the Sound Blaster and Pentium Computer by Stuart Dawson, Assistant Manager of our Belfast shop.

Mrs. Creaner will use the computer for the development of leaflets to promote her own business.

Look out for further contests and prizes from Maplin.

So until next month, from the rest of the team and myself, enjoy this issue.

ABC AUDIT BUREAU OF CIRCULATIONS CONSUMER PRESS

Front Cover Picture: ©Copyright 1995 BT Pictures
Other Pictures: ©Copyright 1995 Maplin Electronics plc, All rights reserved.

EDITORIAL

Editor Robin Hall FBIS, G4DVJ
Technical Authors Maurice Hunt BSc (Hons), Mike Holmes.
Print Co-ordinators John Craddock, Len Carpenter
News Editor Stephen Waddington BEng (Hons)
Drawing Office Ross Nisbet
Technical Illustrators Paul Evans, Nicola Hull, Kevin Kirwan Dip.Comp.
Project Development Chris Barlow, Dennis Butcher, Alan Williamson, Nigel Skeels

PRODUCTION

Art Director Peter Blackmore
Production Controller Jason Hyatt
Designers Jim Bowler, Matt Buhler
Layout Artists Tracey Walker, Adrian Dulwich, David Holt, Daniel Drake.
Photography Co-ordinator Tracy Swann
Published by Maplin Electronics plc., P.O. Box 3, Rayleigh, Essex, SS6 8LR. Tel: (01702) 554155. Fax: (01702) 553935.
Lithographic Reproduction by Planagraphic Studios, 18 Sirdar Road, Brook Road Ind. Estate, Rayleigh, Essex SS6 7UY.
Printed by St Ives (Caerphilly) Ltd., Caerphilly, Mid-Glamorgan, CF8 3SU.

MANAGEMENT

Senior Manager Design and Publications Steve Drake
Publications Manager Roy Smith
Development Manager Tony Bricknell

ADVERTISING

Jackson-Rudd & Associates Ltd., 2 Luke Street, London, EC21 4NT. Tel: (0171) 613 0717. Fax: (0171) 613 1108.
Advertisement Manager Eric Richardson.

UK NEWSTRADE DISTRIBUTION

United Magazine Distribution Ltd., 16-28 Tabernacle Street, London EC2A 4BN. Tel: (0171) 638 4666. Fax: (0171) 638 4665

©Copyright 1995 Maplin Electronics plc.

Copyright: All material is subject to worldwide copyright protection, and reproduction or imitation in whole or part is expressly forbidden. Permission to reproduce printed circuit board layouts commercially or marketing of kits must be sought from the publisher.

Advertisements: Whilst every reasonable precaution is undertaken to protect the interests of readers by ensuring, as far as possible, that advertisements appearing in the current issue of *Electronics* are bona fide, the publisher and staff of the magazine cannot give any undertakings in respect of statements or claims made by advertisers, whether on printed page or on loose insert. Readers who have reasonable grounds to believe that they have been misled are advised to contact their local Trading Standards Office.

Editorial: The views of individual contributors/authors are not necessarily those of either the publisher or the editor. Where errors occur corrections will be published as soon as possible afterwards.

Publisher's Statement: Maplin Electronics plc., take all reasonable care to prevent injury, loss or damage of any kind being caused by any matter published in *Electronics*. Save insofar as prohibited by English law, liability of every kind including negligence is disclaimed as regards any person in respect thereof.

Project Ratings

Projects presented in this issue are rated on a 1 to 5 for ease or difficulty of construction to help you decide whether it is within your construction capabilities before you undertake the project. The ratings are as follows:

1 Simple to build and understand and suitable for absolute beginners. Basic of tools required (e.g., soldering iron, side cutters, pliers, wire strippers and screwdriver). Test gear not required and no setting-up needed.

2 Easy to build, but not suitable for absolute beginners. Some test gear (e.g., multimeter) may be required, and may also need setting-up or testing.

3 Average. Some skill in construction or more extensive setting-up required.

4 Advanced. Fairly high level of skill in construction, specialised test gear or setting-up may be required.

5 Complex. High level of skill in construction, specialised test gear may be required. Construction may involve complex wiring. Recommended for skilled constructors only.

Ordering Information

Kits, components and products stocked by Maplin can be easily obtained in a number of ways:

Visit your local Maplin store, where you will find a wide range of electronic products.

If you do not know where your nearest store is, Tel: (01702) 552911. To avoid disappointment when intending to purchase products from a Maplin store, customers are advised to check availability before travelling any distance.

Write your order on the form printed in this issue and send it to Maplin Electronics, P.O. Box 3, Rayleigh, Essex, SS6 8LR. Payment can be made using Cheque, Postal Order, or Credit Card.

Telephone your order, call the Maplin Electronics Credit Card Hotline on (01702) 554161.

If you have a personal computer equipped with a MODEM, dial up Maplin's 24-hour on-line database and ordering service, CashTel. CashTel supports 300-, 1200- and 2400-baud MODEMs using CCITT tones. The format is 8 data bits, 1 stop bit, no parity, full duplex with Xon/Xoff handshaking. All existing customers with a Maplin customer number can access the system by simply dialling (01702) 552941. If you do not have a customer number Tel: (01702) 552911 and we will happily issue you with one. Payment can be made by credit card.

If you have a tone dial (DTMF) telephone or a pocket tone dialler, you can access our computer system and place orders directly onto the Maplin computer 24 hours a day by simply dialling (01702) 556751. You will need a Maplin customer number and a personal identification number (PIN) to access the system. If you do not have a customer number or a PIN Tel: (01702) 552911 and we will happily issue you with one.

Overseas customers can place orders through Maplin Export, P.O Box 3, Rayleigh, Essex, SS6 8LR, England; Tel: +44 1702 554000 Ext. 326, 327 or 351; Fax: +44 1702 553935.

Full details of all of the methods of ordering from Maplin can be found in the current Maplin Catalogue.

Subscriptions

Full details of how to subscribe may be found on the Subscription Coupon in this issue. UK Subscription Rate: £23.76/12 months, £11.88/6 months.

Prices

Prices of products and services available from Maplin, shown in this issue, include VAT at 17·5% (except items marked NV which are rated at 0%) and are valid between 29th September 1995 and 29th February 1996 errors and omissions excluded. Prices shown do not include mail order postage and handling charges, which are levied at the current rates indicated on the Order Coupon in this issue.

Technical Enquiries

If you have a technical enquiry relating to Maplin projects, components and products featured in *Electronics*, the Customer Technical Services Department may be able to help. You can obtain help in several ways; over the phone, Tel: (01702) 556001 between 9.00am and 5.30pm Monday to Friday, except public holidays; by sending a facsimile, Fax: (01702) 553935; or by writing to: Customer Technical Services, Maplin Electronics plc., P.O. Box 3, Rayleigh, Essex, SS6 8LR. Don't forget to include a stamped self-addressed envelope if you want a written reply! Customer Technical Services are unable to answer enquiries relating to third-party products or components which are not stocked by Maplin.

'Get You Working' Service

If you get completely stuck with your project and you are unable to get it working, take advantage of the Maplin 'Get You Working' Service. This service is available for all Maplin kits and projects with the exception of: 'Data Files'; projects not built on Maplin ready etched PCBs; projects built with the majority of components not supplied by Maplin; Circuit Maker ideas; Mini Circuits or other similar 'building block' and 'application' circuits. To take advantage of the service, return the complete kit to: Returns Department, Maplin Electronics plc., P.O. Box 3, Rayleigh, Essex, SS6 8LR. Enclose a cheque or Postal Order based on the price of the kit as shown in the table below (minimum £17). If the fault is due to any error on our part, the project will be repaired free of charge. If the fault is due to any error on your part, you will be charged the standard servicing cost plus parts.

Kit Retail Price	Standard Servicing Cost
up to £24.99	£17.00
£25.00 to £39.99	£24.00
£40.00 to £59.99	£30.00
£60.00 to £79.99	£40.00
£80.00 to £99.99	£50.00
£100.00 to £149.99	£60.00
Over £150.00	£60.00 minimum

Readers Letters

We very much regret that the editorial team are unable to answer technical queries of any kind, however, we are very pleased to receive your comments about *Electronics* and suggestions for projects, features, series, etc. Due to the sheer volume of letters received, we are unfortunately unable to reply to every letter, however, every letter is read – your time and opinion is greatly appreciated. Letters of particular interest and significance may be published at the Editors discretion. Any correspondence not intended for publication must be clearly marked as such.

Write to: The Editor, *Electronics – The Maplin Magazine*, P.O. Box 3, Rayleigh, Essex, SS6 8LR, or send an e-mail to AYV@maplin.demon.co.uk

TECHNOLOGY WATCH!

with Keith Brindley

The computer has long been thought of as the classic example of *deferred design*. Since its inception in the valve-based megaliths of yesteryear, to the desktop microprocessor-based powerhouses of today, and the future *common hardware reference platform* (CHRP) PowerPC-based machines of next year, the computer is a tool which allows us to do things. In reality, it doesn't matter what it allows us to do – that isn't important! What *is* important is the fact that we can apply the computer tool to any task we want to complete.

If we want to build a car, we design it on computers, we draw out a buying list on computers, we order the parts on computers, we build it using computers and, in the case of the typical modern engine-managed automobile, we drive it using computers. If we want to produce a book, we write the text on a computer, we draw the illustrations on a computer, we can take photographs on a digital camera (a rose by any other name . . .), we retouch those photographs on a computer, we layout the pages on a computer, we print it using a computer. That's deferred design. How the computer works: how the electrons buzz around inside it, how the logic gates flip open or flop closed, how the hard disk whizzes and whirrs, how the bits and bytes are stored, are all irrelevant to the user. It's a tool which has been designed with no particular purpose in mind. How it is to be used depends on the user – the decision how it will be used is put off until the user comes along and puts fingers to keyboard. That's right – it's *deferred design*. The user simply buys the software to do the job required, and the computer hardware carries it out mechanically.

But actually, the hardware tool which we know of as a computer is not now the only classic example of deferred design. Modern software program suites (Lotus' SmartSuite, Novell's PerfectOffice, and in particular, the latest version of Microsoft's Office) are starting to form the software equivalent of the hardware computer. These programs are becoming so involved, it's impossible to tell where one application within the suite leaves off and the next starts. Indeed, it's best to use the suites like that – start with a job to do, and jump from one application to the next to finish it. Whether you are using a word processor, a spreadsheet, a database, presentation software, graphics make-up, or whatever, is irrelevant. What *is* important, is the job you have chosen to perform. Just as the computer is a tool which allows you to do a job, so now are these program suites.

True, the jobs you can perform with such software are limited, as yet, to general office-type tasks. Jump outside of these features, and you still need other software, but the seeds are sown. The next generation of such software probably won't comprise separate programs within just one suite. It'll most likely be a conglomeration of modules which, as far as the user is concerned, have no apparent boundaries. Their design will have been deferred to the extent that you won't really know if you're word processing in WordPerfect, spreading sheets in 1-2-3, or presenting yourself with PowerPoint. Indeed, and what's more to the point, it won't even matter. You simply won't need to know what actual core application you are using. Even better, there won't be any such thing as a core application. The modules you choose and use will be defined by the task you have to do. Expect this technology on your computer desktop next year. Expect, though, to need a more powerful desktop to be able to run the technology to its far-stretched limits.

Let's Disc-uss It

The two rival formats for digital video disc are still in development, but are likely to appear within the coming year. At least that is something to agree on. Which format becomes the standard, however, is not so clear-cut. Philips and Sony have the *high-density multimedia compact disc* (HD-MCD), which is an extended development of the audio compact disc technology. On the other hand, Toshiba (who conceived it), Hitachi, JVC, Matsushita, Mitsubishi, Thomson, Samsung and Zenith, have the *super-density digital video disc* (SD-DVD).

Around two to three hours or more of digital video is expected on a single disc, and the potential for data storage for computers is somewhere around ten times the existing capacity of CD-ROM.

The two systems are, as you might expect, not compatible. Both, however, are backwards-compatible with standard audio CD and Photo-CD, although it's only the high-density multimedia compact disc which as yet offers forwards-compatibility with CD-ROM. There are moves afoot to merge the two rival formats, but it's by no means likely that a single medium will emerge from the two. From past experiences with formats in the audio and video arena, it's more likely that a costly and sanctimonious war between the two will take place over the coming years, and the medium will not really affect Joe Public until that war is over. In the end, though, unless the product is cheap enough, it probably won't affect the consumer market at all.

Mobile money

On the face of it, the market for cellular 'phones is an odd one. Cellular 'phones are literally being given away, in an attempt to woo customers. In many cases, too, not only are the 'phones being given away, but financial incentives are being offered to 'buy' a particular model. If you look at the situation in depth, the whole thing seems most peculiar. Mobile 'phones aren't cheap to make. Huge development and manufacturing costs make them a particularly expensive product. Although it's impossible to pin manufacturers down about price, it's a safe bet to assume that they cost well over £100 each. But taking that £100 as a starting price, how is it that you can walk into a high-street electrical store and pick one up for £20 or less? Who's making the money out of it? And, who's making the loss?

Well, the situation's like this. The service provider buys from the manufacturer at £100, then literally gives them to the dealer. On top of this, the dealer is offered a bonus of, say, £50 for every new customer. So, for every 'phone sold to a customer (at, say, £20), the dealer makes £70, while the service provider loses £150. The whole thing reminds me of the way razors are sold. For a pittance, you can pickup 'a razor (with a couple of free razor blades) in a bubble-pack. Once your 'free' razor blades are done, you go out and buy some more. However, the razor blades cost considerably more than the razor did in the first place. The razor is the *hook* by which you hang yourself. And so it is for mobile 'phones. The cheap 'phone is the hook, but it's the call-costs which forms the rope from which the hook (and maybe *you* if you use the 'phone a lot) hangs. The service provider, of course, makes a healthy long-term profit once you start to use the 'phone.

The opinions expressed by the author are not necessarily those of the publisher or the editor.

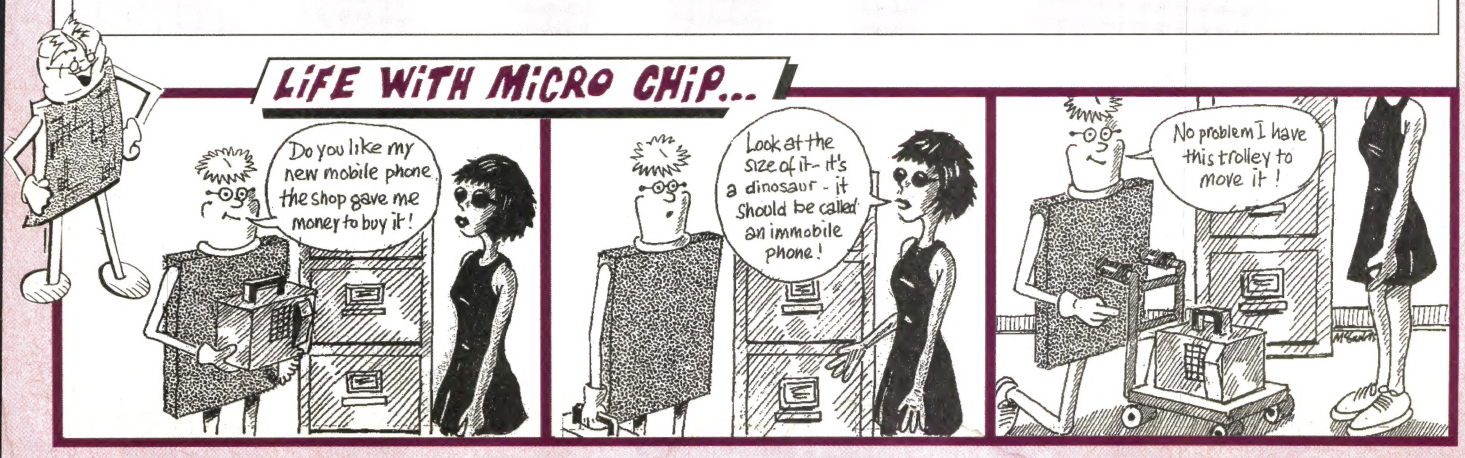

1 PROJECT RATING

DOOR CHIME

KIT AVAILABLE (90063) PRICE £6.99

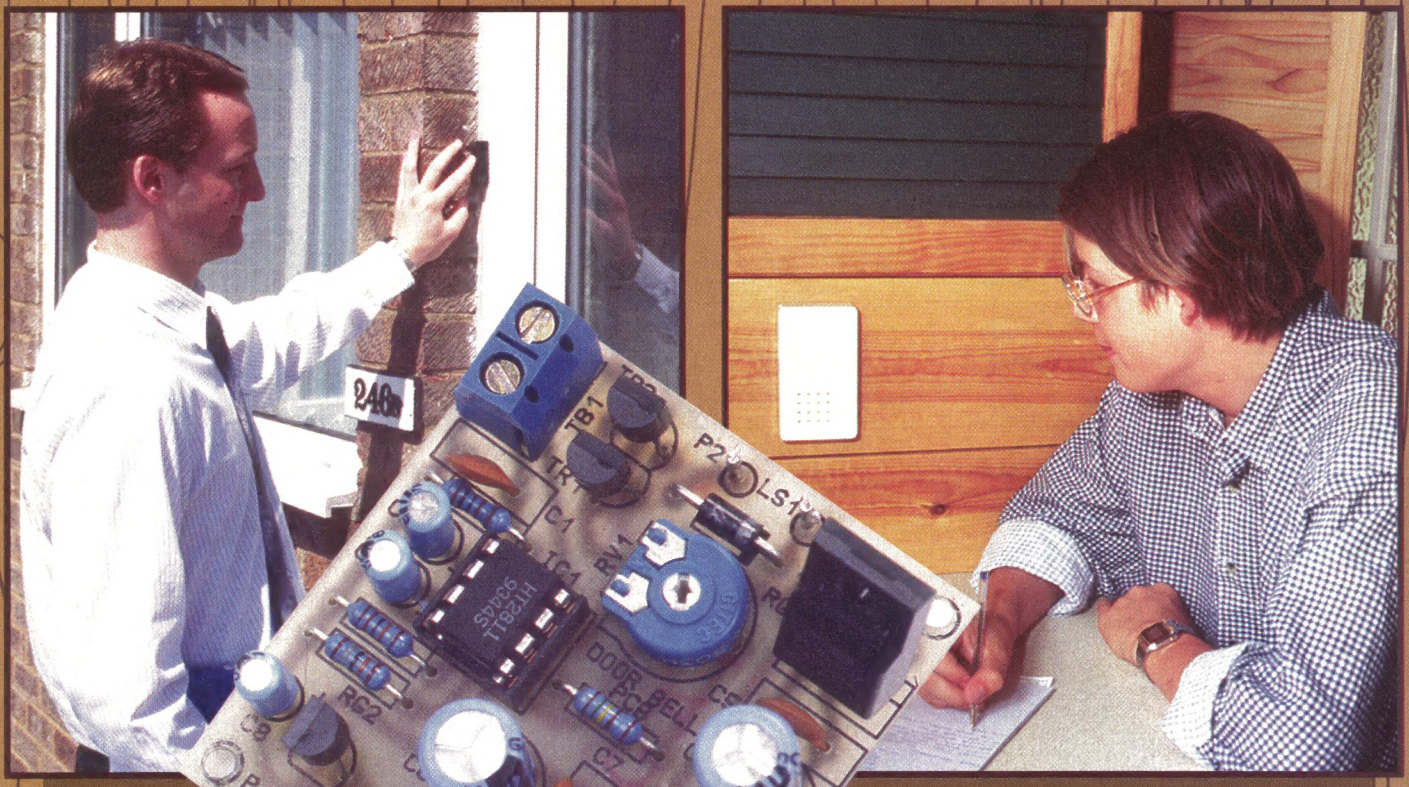

The Assembled Door Chime PCB.

FEATURES

- ★ Dual tone bell sound
- ★ Adjustable pitch
- ★ Ni-Cd charge and back-up facility
- ★ Compact and attractive design
- ★ Can be powered from AC bell transformer, or batteries

APPLICATIONS

- ★ Homes, shops and offices
- ★ Theatre productions
- ★ Shop door announcer

Design by Nigel Skeels

Text by Maurice Hunt and Nigel Skeels

Construct this simple-to-build, compact and pleasant sounding two-tone door chime, and you will almost certainly be in a better frame of mind each time you open the door to callers, when compared to the harsh, insistent and irritating sound of a conventional bell or buzzer type doorbell, plus you have the added satisfaction of having built it yourself – it could even be a talking point! The two-tone chime, which is adjustable in pitch, is triggered from your existing bell push, or by another suitable switch of your choice. The circuit can be operated from either batteries (which will last a long time, due to the low power consumption), or from an AC mains transformer, or even both if you wish, since built-in charging circuitry is incorporated to accommodate nickel-cadmium back-up cells, so that your door chime will still operate during power cuts!

Circuit Description

The door chime circuit, the block and circuit diagrams of which are given in Figures 1 and 2, uses an HT-2811, IC1, which is a dedicated doorbell sound generator device. This features a very low standby current of around 1μA, which is very useful when using battery operation. RV1 in combination with R4, adjusts the frequency of the internal oscillator. R2 and C2 control the envelope of the first chime, R3 and C3 control the envelope of the second chime. Connecting pin 1 to the 3V supply triggers the chime sound, thus pin 1 is connected to terminal block TB1, which allows easy wiring to the outside bell push. Transistors TR1 and 2 provide amplification for the chime's internal loudspeaker to be easily audible, and D1 is included to prevent the back emf of the speaker from damaging TR2.

Power for the circuit is derived from either of two sources – low voltage (stepped down via a suitable transformer) mains AC, or batteries (DC). Bridge rectifier BR1 is used to fully rectify the incoming AC voltage, which is then passed on to RG1, a L7808CP 8V regulator. D2 forms a barrier to prevent any back voltage from the battery damaging RG1. D3 and D4, together with current limiting resistor R5, form the heart of the charging circuit. RG2 is a 3V regulator, and capacitors C1 and C4 to C8 are used for decoupling. Note that if the bell push is pressed in rapid succession, the chime gets played at normal speed. If the bell push is held in, the chime is repeated until the button is released. With the button pressed once, the two-tone chime will be heard twice over.

PCB Construction

This is a simple-to-build project, and the PCB should be built up in the conventional manner, in general order of ascending component size, from smallest to largest. Follow the PCB legend and track diagrams, given in Figure 3, when building up the board. Install the five resistors, followed by the diodes D1 to D4, ensuring their correct polarity, in accordance with the PCB legend. Next, solder in the 8-pin DIL IC holder, aligning its notch as per the PCB printing, and then fit potentiometer RV1. They are fitted before some of the smaller components, to allow you to hold them against a flat surface during soldering (so that they fit flatly onto the board). Follow this by fitting the three ceramic disc capacitors C1, C5, and C7, then the electrolytic capacitors, C2 to C4, C6 and C8, again, ensuring their correct orientation. Fit the transistors TR1 and TR2, the voltage regulator RG2 (making sure that you don't confuse it with the similar-looking transistors), the bridge rectifier, BR1, and the larger voltage regulator, RG1, taking care with all these components to fit them

Specification

Maximum AC current consumption:	130mA
Standby AC current consumption:	8mA
Maximum DC current consumption:	95mA
Standby DC current consumption:	1μA
AC voltage range:	8 to 16V
DC voltage range:	3 to 25V
Battery requirement:	4 × AA 1·2V Ni-Cd or 1·5V dry cells
PCB Dimensions:	50 × 50mm

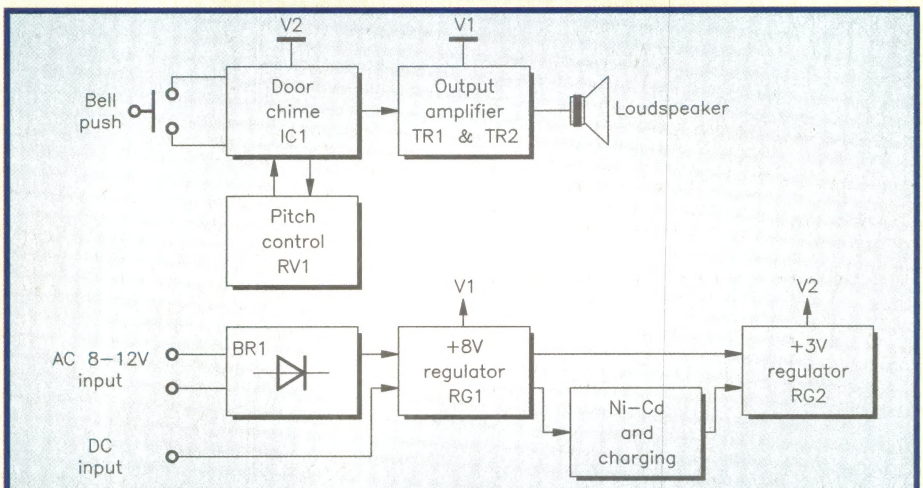

Figure 1. Door Chime block diagram.

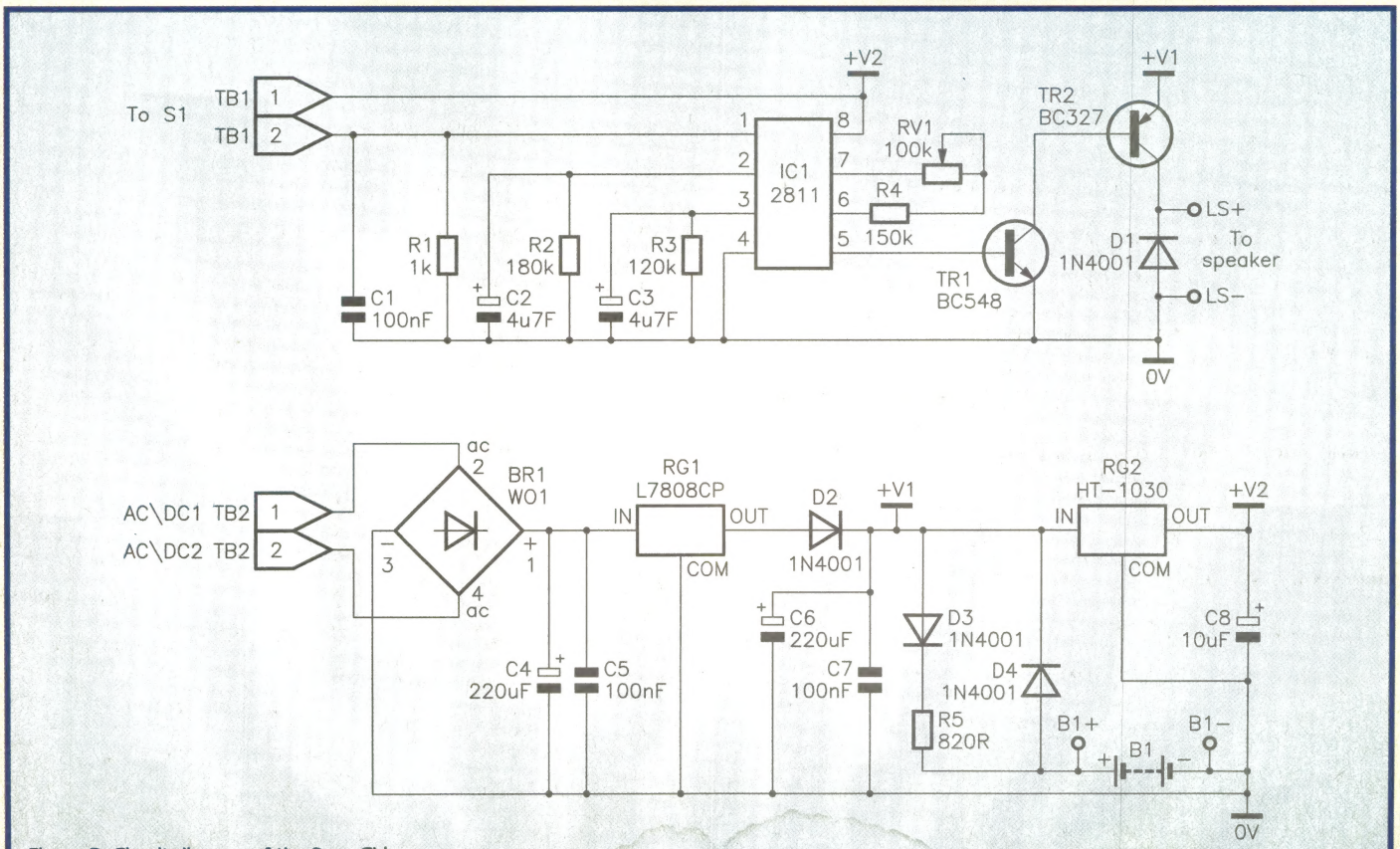

Figure 2. Circuit diagram of the Door Chime.

the correct way round. Note that RG1 is left free-standing: it does not get warm enough to warrant the fitting of a heatsink to it. Install the two 2-way terminal blocks TB1 and TB2 (with their cable openings facing outwards), and the four PCB pins into the holes marked P1 to 4 on the PCB, then solder on the battery clip (red positive lead to P3, black negative lead to P4), and the speaker leads (use an 8Ω, 0·3W speaker, such as WB13P) to terminals P1(+) and P2(–). Finally, plug in IC1, taking precautions to avoid static charges damaging it.

Case Construction

The optional box drilling diagram is shown in Figure 4, with an exploded assembly diagram provided in Figure 5. Take care when drilling the speaker holes, not to scratch the case, thus spoiling the overall appearance of the finished project. It is highly advisable to mark the position for the hole using a pointed instrument prior to drilling. Note that the holes for the PCB retaining screws should be countersunk, so that the back of the Chime casing remains flat, to avoid it standing proud of the wall, which would be unsightly. The countersinking can be performed either with an appropriate drill, or by putting the screws into the holes, and gently heating them with a soldering iron until they sink in, taking care not to overdo it (this should be done in a well ventilated environment).

The PCB mounting screws are then passed through the case, nuts being used below the PCB to raise its track side away from the casing, with another nut on the component side to secure it. The loudspeaker is glued into place using a general-purpose adhesive. The battery pack is secured in the space alongside the PCB using Velcro fasteners, which are self-adhesive for sticking to the case and battery holder.

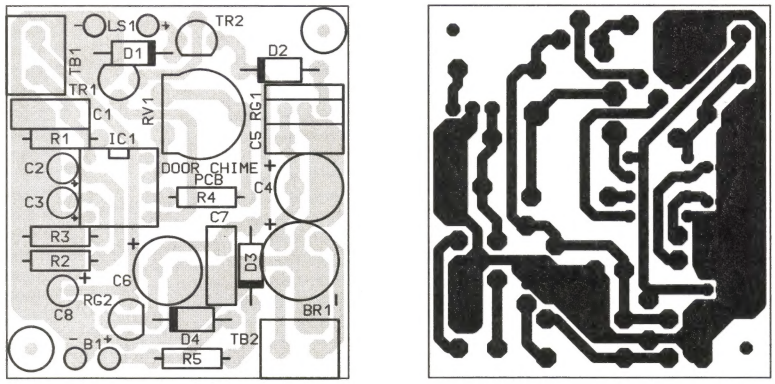

Figure 3. PCB legend and track.

Installation and Use

Before installing the system, it is a good idea to check if any existing doorbell wiring could be of use. For example, an existing bell transformer is ideal, if its output voltage is between 8 and 16V, and it is up to the maximum current requirement of 130mA.

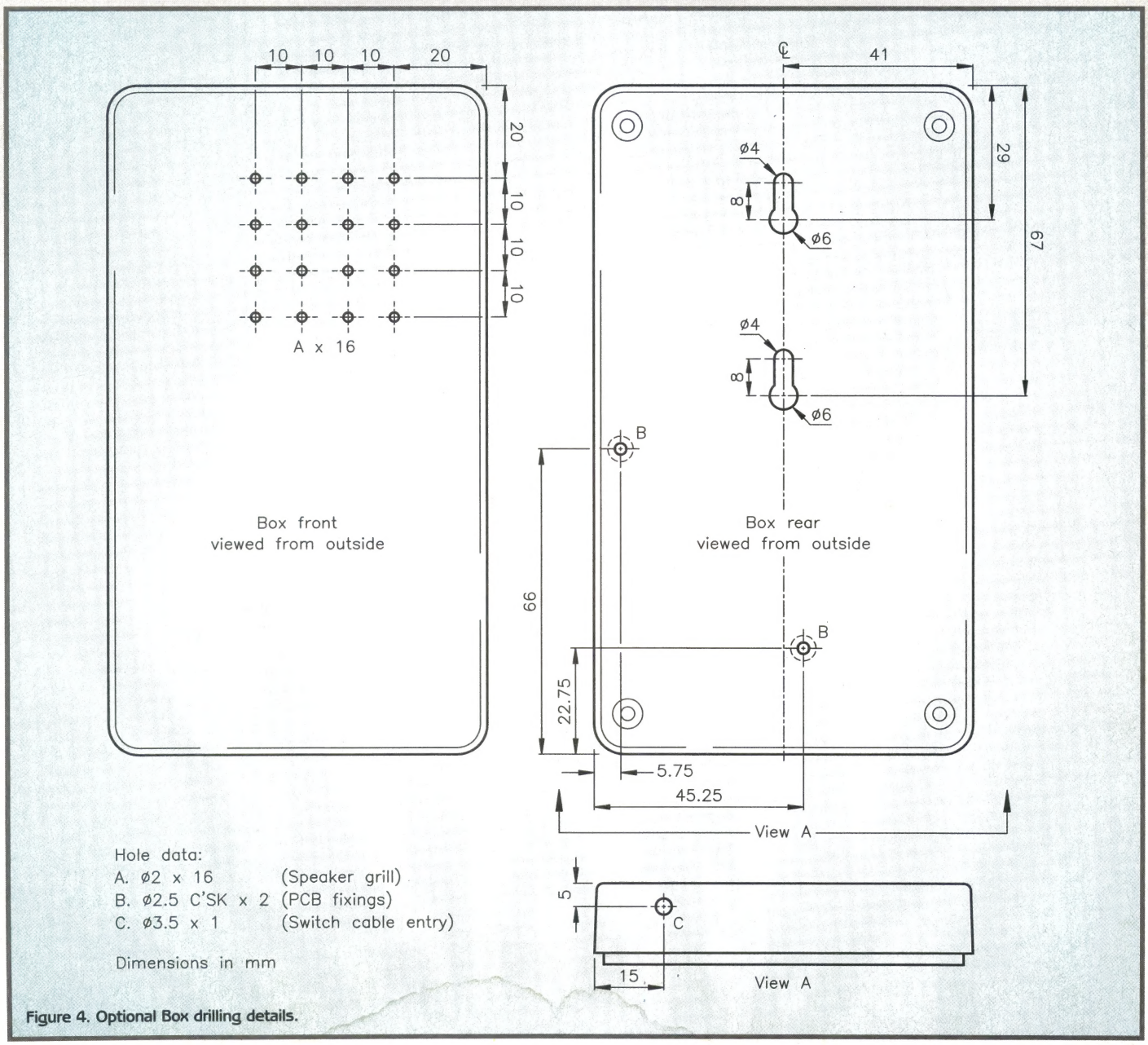

Figure 4. Optional Box drilling details.

Figure 5. Exploded assembly diagram.

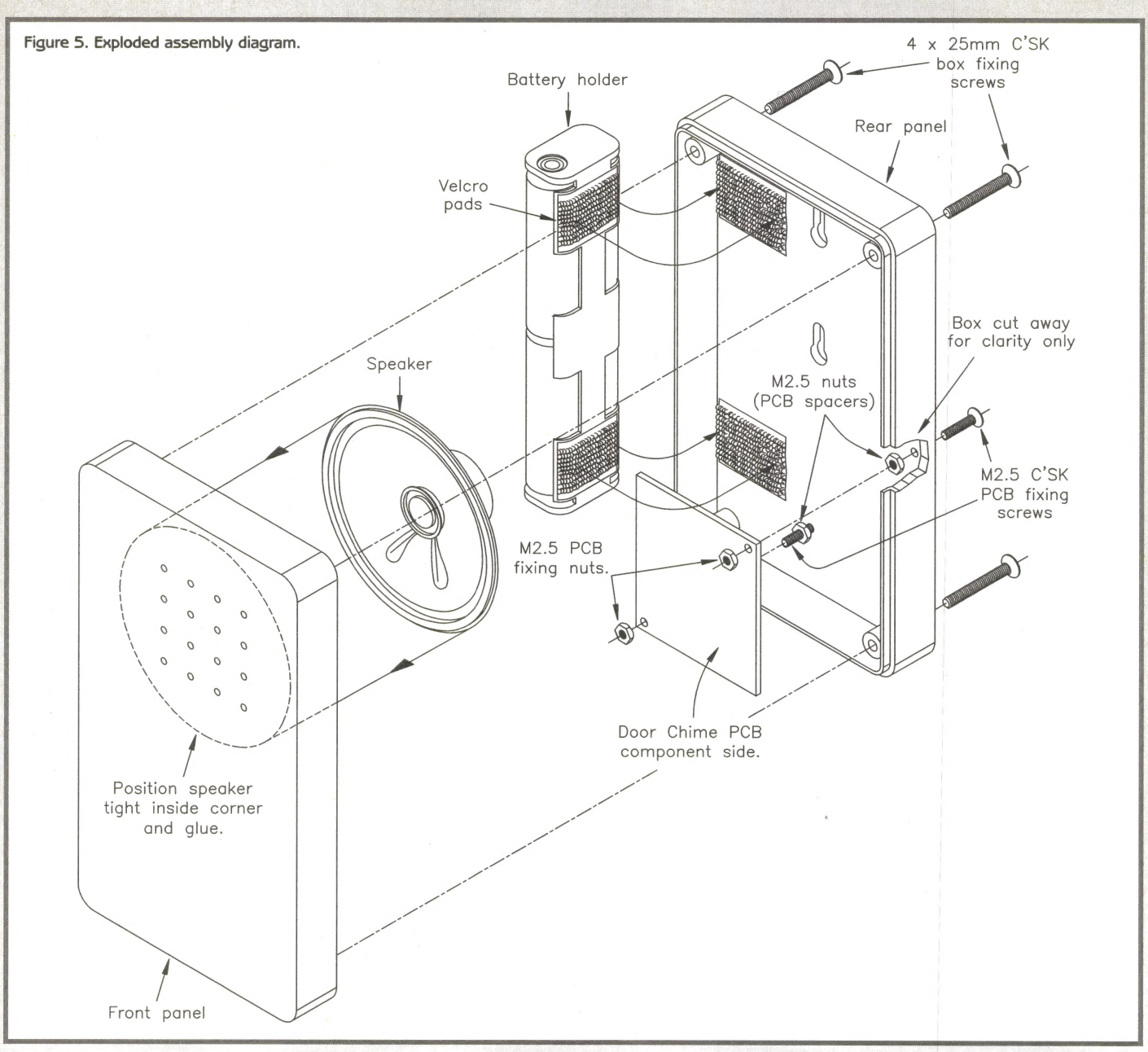

A suitable Maplin part would be (FL375). It is possible to connect up multiple bell push switches to one bell unit, but it must be kept in mind that these should be wired in parallel. The Door Chime should be connected up as per the wiring diagram shown in Figure 6.

Pass the wire for the bell push through the appropriate hole in the casing, and connect it to terminal block TB1, with the low-voltage AC mains lead (if you are using it) connected to TB2. Use Zip wire (XR39N/PA75S) or similar. Now test the Door Chime to ensure it works as expected, and set the pitch of the chime to your personal preference, by means of potentiometer RV1. If all is well, the Door Chime is ready to be mounted on the wall, as described below.

The mounting position of the Chime should be high on an inside wall, protecting it from moisture ingress, as well as any interfering little hands and/or ferocious pets, and preferably near to the door so that the caller can hear it as well as you, otherwise they will tend to keep pressing the bell push repeatedly, thinking that they have not got any response. Secure the connecting leads using plastic cable clips of a suitable size for the cables being used (see the Electronic Components, Cables sub-section of the Maplin Catalogue).

Continued on page 22.

Figure 6. Wiring diagram for the Door Chime.

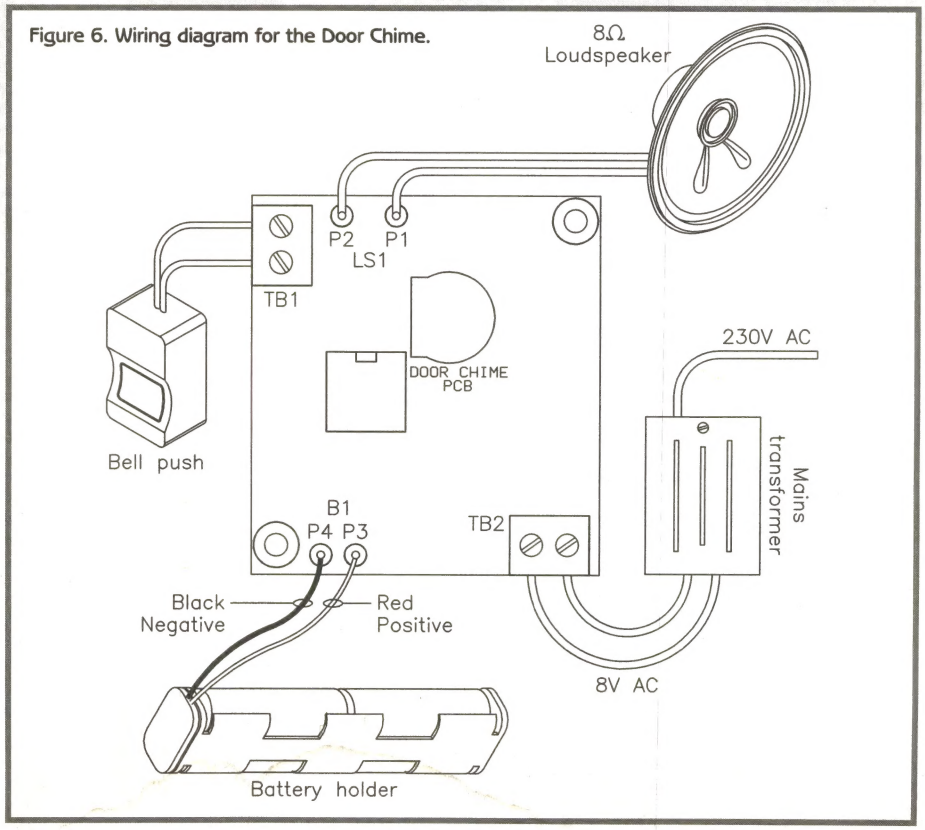

by Douglas Clarkson

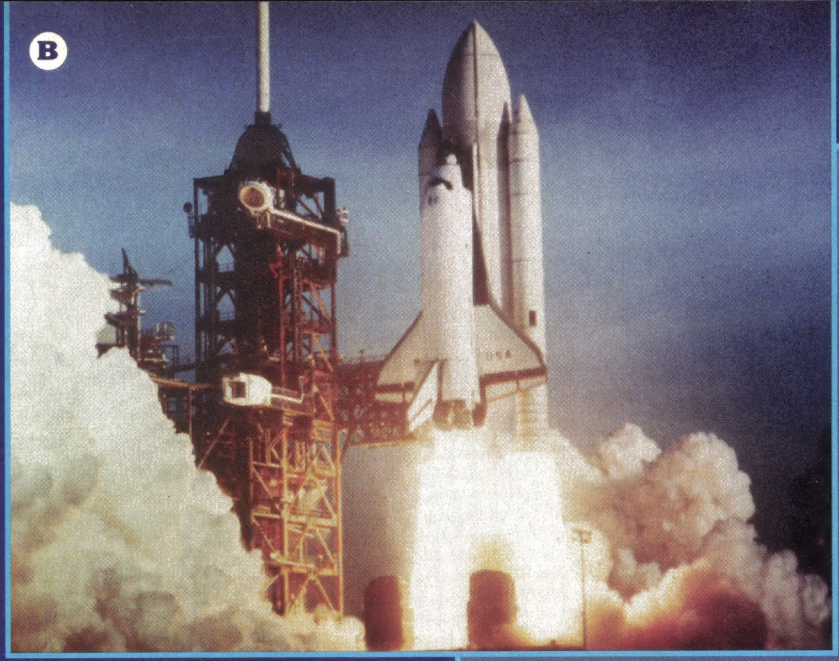

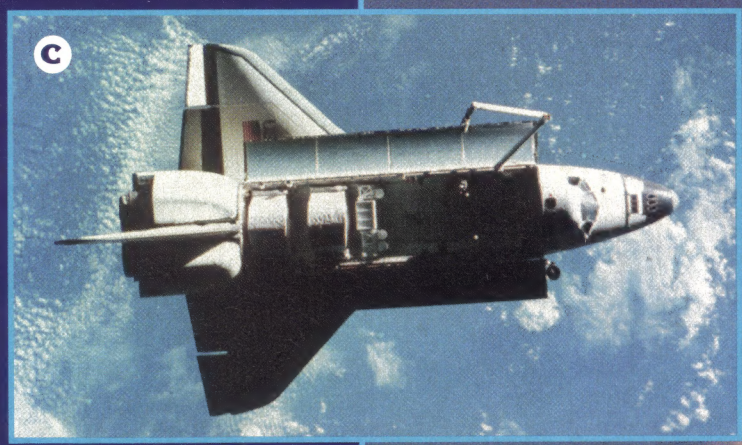

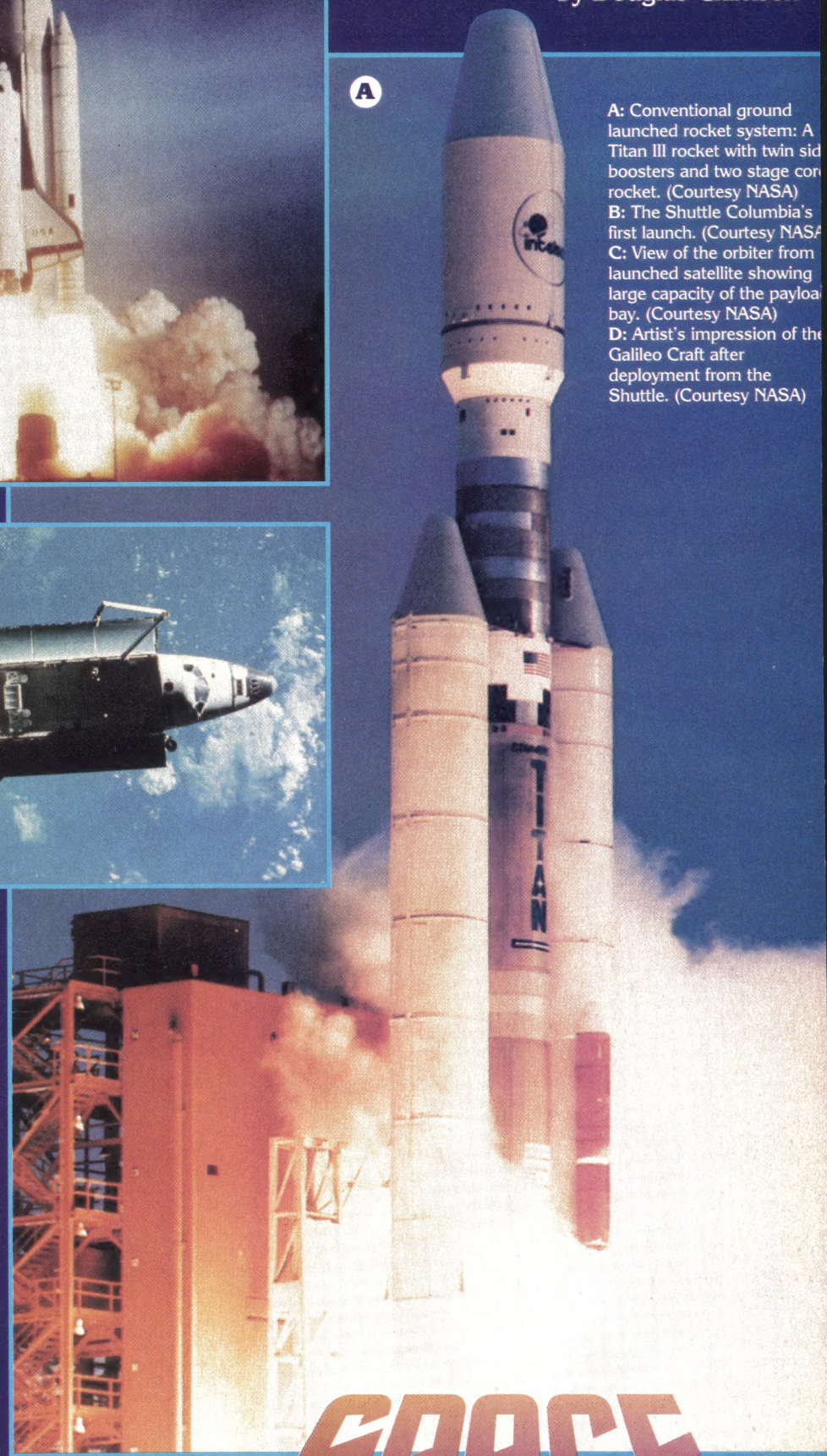

A: Conventional ground launched rocket system: A Titan III rocket with twin sid boosters and two stage cor rocket. (Courtesy NASA)
B: The Shuttle Columbia's first launch. (Courtesy NASA
C: View of the orbiter from launched satellite showing large capacity of the payloa bay. (Courtesy NASA)
D: Artist's impression of the Galileo Craft after deployment from the Shuttle. (Courtesy NASA)

SPACE PROPULSION PRESENT AND FUTURE

As the 20th century draws to some kind of technological conclusion, it will certainly be remembered as the dawn age of space travel. So many perceptions have been changed by the exploits of manned and unmanned space travel. Yet, it is as if the momentum for further development of space technology has faltered. With the collapse of the Soviet Union, there is no longer the strategic competition of the Space Race. There are greater priorities, in feeding a population and in reducing direct taxation.

Arthur C. Clarke recently made an interesting observation, in reviewing the 25th anniversary of the first moon flight and the prospects of new modes of energy. It was quite revealing that the total energy cost of sending the lunar lander to the moon (based on kWh costs of equivalent electricity) was less than $100.

The ticket price per Apollo round trip was about $2 billion per passenger. Space travel is all about improving the efficiency of energy conversion into space flight.

The Big Lift

The majority of 'space' missions do not in fact stray far from the surface of the earth. Present Shuttle missions, for example, cannot usually exceed a height of some 480km – described as low earth orbit. Most satellite launches are required in such low earth orbits only, and it was this level of function which led to the initial development of the Shuttle as a cost-effective method of delivering a payload on board a manned launch vehicle. Planning for the Shuttle began in the late 1960s, and the first proving flight took place on April 12th, 1981. The combined Shuttle and launch vehicle stands 184·2m high at launch, and weighs 2,000 tonnes, the craft can carry 29·5 tonnes into space and return with 14·5 tonnes of payload.

Based on the concepts of conventional propulsion systems, the lift to low earth orbit is seen as the mechanism for most future manned space missions beyond the earth. It is estimated, for example, that a modest manned mission to Mars will require a craft of at least 1,000 tonnes. Based on the current shuttle capacity and fly frequency (8 per year), it would take some 4 years of exclusive Shuttle flights to assemble such a vehicle.

Rocket Technology

Perhaps there have been more ideas expressed about new means of space propulsion than almost any other sector of science. All these ideas, however, in some shape or form, relate to rocket propulsion, which in turn, relates to Newton's Third Law of Motion – "to every action there is an equal and opposite reaction."

In rocket technology, a fuel (such as liquid hydrogen) reacts with an oxidiser (such as liquid oxygen) and the resulting chemical reaction releases considerable amounts of energy,

Artist's impression of the An-225/HOTOL Launch Vehicle system shortly after separation. (Courtesy British Aerospace)

	Case 1	Case 2	Case 3
Mass empty stage 1	500	500	1,000
Mass fuel stage 1	3,000	2,000	3,000
Mass empty stage 2	100	150	300
Mass fuel stage 2	400	375	600
Mass empty stage 3	65	120	150
Mass fuel stage 3	65	120	150
Final velocity (km/s)	13·5	11·2	10·1
Ratio (total initial mass: total empty stages)	6·2	4·37	3·6

Table 1. Parameters of a series of rockets with three.

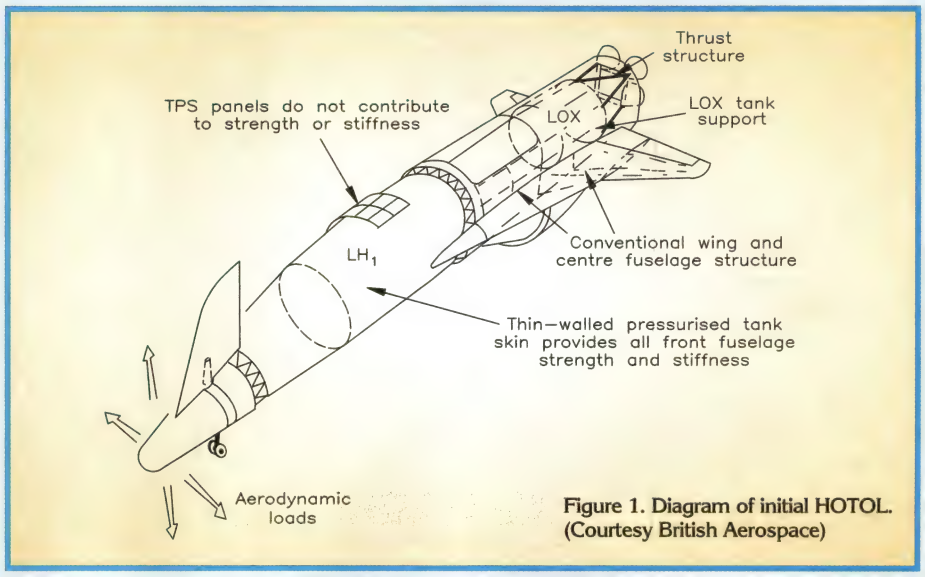

Figure 1. Diagram of initial HOTOL. (Courtesy British Aerospace)

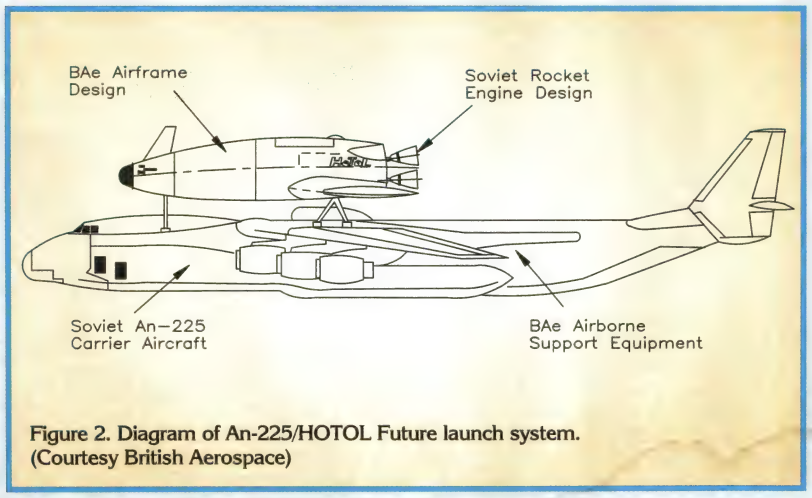

Figure 2. Diagram of An-225/HOTOL Future launch system. (Courtesy British Aerospace)

Artist's impression of initial ground launched HOTOL shown in ascent mode. (Courtesy British Aerospace)

resulting in a high exhaust velocity of the combustion products. This exhaust velocity is a key indicator of the worth of such a fuel mixture.

If a small amount of mass *dm* is released at *Ve*, exhaust velocity, and this results in a change in velocity dv of the rocket of mass m, then by Newton's Third Law:

$$dm\ Ve = m\ dv$$

By a process of integration and assuming the start conditions of initial rocket mass = *Mi*, final rocket mass = *Mf*, initial velocity = *Vi*, final velocity = *Vf*:

$$dm = \frac{Ve\ dv}{m}$$

$$Vf - Vi = \frac{Ve \times low(Mi)}{Mf}$$

The term *Mi/Mf* is termed the mass ratio of the rocket. Where a single stage rocket is achieving low earth orbit, the rocket needs to be able to achieve the potential velocity of 10km/s in order to maintain orbit and expend energy to overcome aerodynamic drag through the atmosphere. Assuming an exhaust velocity of 4·5km/s based on high efficiency liquid oxygen/hydrogen fuel, this indicates that a mass ratio of 9·2 is required. This implies that for every 1 tonne transported into space, some 8·2 tonnes of fuel are required at launch. The useful payload, however, is usually a small percentage of the total mass launched into orbit. For systems such as the shuttle the figure is around 7%. One of the ways to overcome this lack of efficiency is to utilise staged rockets.

By the use of solid booster rockets and a drop tank of liquid oxygen, the Shuttle orbiter has a mass ratio of about 5, so it can carry a larger payload into space. This additional efficiency, however, is achieved at some expense in refurbishment of booster rockets and loss of the drop tank. Each Shuttle mission launch costs in excess of $100 million. Table 1 shows simple simulations for three stage rockets.

Where the Shuttle in orbit is likely to have a mass of 400 tonnes, at launch it would have a load of 1,600 tonnes of fuel for the mass ratio of 5. As a single stage device with a mass ratio of 9, it would have to start with 3,600 tonnes of fuel to attain low earth orbit.

HOTOL – Ground Launched

The problem of large mass ratio, single stage to orbit (STTO) craft has been realised for some time. One of the ways to improve the statistics is to use an air breathing engine in the atmospheric transit stage to lighten the load of fuel (liquid oxygen) that would otherwise be required to be carried. The initial concept of HOTOL was developed at British Aerospace in around 1983. Present launch vehicles are either conventional rocket with stages, such as Ariene, or partly reusable, as with the Shuttle.

In its primary role of a launch vehicle, HOTOL was designed as an unmanned unit. The addition of significant infrastructure for support of on board astronauts would have significantly increased the size of the craft – probably by a factor of between 1·5 and 2. The drive to use a single stage craft places considerable emphasis on mass saving within the launch vehicle. This in turn places great importance on the materials technology to develop lightweight yet robust components. Table 2 shows the relative mass components of ground launched HOTOL.

Thus, the mass ratio of the craft is 5 – similar to that of the Shuttle launch system. In the design of HOTOL, there are a considerable number of factors which determine the amount of payload which can be placed into low earth orbit. A key consideration is the aerodynamic drag of the craft and the relative mass of the air breathing element and rocket combustion element of the propulsion system. In the design of HOTOL, shown in Figure 1, the greatest volume is occupied by the liquid hydrogen tank at the mid-section of the vehicle. This tank, roughly 30m long, has a capacity of 900m^3.

It is anticipated that on re-entry, HOTOL, with its larger surface area, would decelerate more rapidly than the Shuttle and consequently, would experience lower peak equilibrium temperatures. Temperatures in excess of 1,600°C would be established on the nose cone, with temperatures of between 1,000 and 1,200°C over most of its other surfaces.

While the Shuttle utilises carbon-carbon compounds, there is a preference in Europe for carbon-silicon carbide compounds, which have a better inherent resistance to oxidation over the vehicle life. The technology of such re-entry tiles is being developed by British Aerospace, and other British manufacturers. In terms of the aerodynamic design, this is optimised to reduce drag and fuel requirements – increasing payload capacity. This factor is of greater importance during the air breathing ascent and is much less important during the rocket ascent, when the air density diminishes rapidly. With a more efficient aerodynamic shape, an air breathing engine of reduced size and mass can be utilised.

The air intake system for the air breathing engine is of critical importance in the aerodynamic design. It must be wide enough to provide enough intake at the top of the air breathing limit (around 28km altitude) and still not disturb the aerodynamic profile near ground level. The intake system has undergone extensive modification, with variable spill of air between the air breathing engine and aft spill by means of flow control vanes. The main structural elements of this system are planned to be fabricated in carbon-silicon-carbide.

In the ascent mode, the centre of gravity of HOTOL is changing significantly. Also, the distribution of lift is varying rapidly with speed, from subsonic to high Mach numbers. This has considerable implications for the aerodynamic stability of the craft. Liquid oxygen can be pumped to the front of the craft at high Mach numbers to stabilise the centre of gravity of the craft.

It was intended that the initial ground-launched HOTOL would take off from a trolley system rather than have its frame strengthened to accommodate a fuel-laden craft. The point of controlled lift-off would be at 280 knots. When the ceiling of the usable atmosphere is reached at around 28km (at speed Mach 5), the air intake ramps would be closed, and the rocket thrust system would take over. With reducing mass and a constant impulsive force, the acceleration of the vehicle would then approach 3g – the payload stressing limit. This will require a degree of thrust reduction in order not to stress the HOTOL structure.

For re-entry, HOTOL would be initially inclined at around 40° 'nose up', with deceleration beginning at about 80km, at Mach 25. Once the heating effect begins to reduce, some 5 minutes after re-entry, the inclination of the craft could be reduced. At subsonic speeds, the descent angle of 18° would be used, reduced to 3° at 1km altitude to give a touchdown speed of 170 knots.

Item	Percentage Mass of Launch (%)
Liquid oxygen	54
Liquid hydrogen	26
Structure	9
Propulsion systems	6
Control systems	2
Payload	3

Table 2. Principal mass components of initial ground launched HOTOL. (Launch mass approximately 250 tonnes).

The An-225/HOTOL Launch Vehicle – Initial Specification

The end of the cold war has made a considerable amount of aerospace technology available to western agencies. When the Antonov An-225 heavy lift aircraft was shown at the Paris Air show in 1989, this demonstrated that an aircraft existed which could lift a fuelled HOTOL vehicle to a height of 9km, at which point it could be released. This capability both improved the economics and versatility of the HOTOL launch, but required considerable modifications to be made in the HOTOL design.

'Interim HOTOL' has been the subject of a joint study between British Aerospace and the Soviet Ministry of Aviation since September 1990. With the ability to release HOTOL at higher altitude, the design of the engine needs to take advantage of higher nozzle expansion ratios. It was proposed to utilise the Soviet RD0120 hydrogen-oxygen engine, which is planned to be re-used approximately 20 times.

Since the interim HOTOL is to be launched at a higher altitude, the design can be shorter and fatter, as shown in Figure 2. Based on preliminary estimates, the interim HOTOL should be capable of delivering a payload of 7 tonnes into an Equatorial orbit at 300km. In order to provide more lift at altitude for the An-225 support craft, it is proposed to modify engine distribution by adding paired Lotarev D-18 engines on the inboard wing pylons.

The factor which determines how far the An-225 can travel with the interim HOTOL attached, is the rate of thermal uptake by the liquid hydrogen of HOTOL. It is estimated that this allows the An-225 to travel for a maximum of two hours and hence cover some 1,400km. The point of release would be when the An-225 was put into a shallow dive.

The Revised An-225/HOTOL and MAKS

In the period since the Interim HOTOL/ An-225 option was first announced, under-

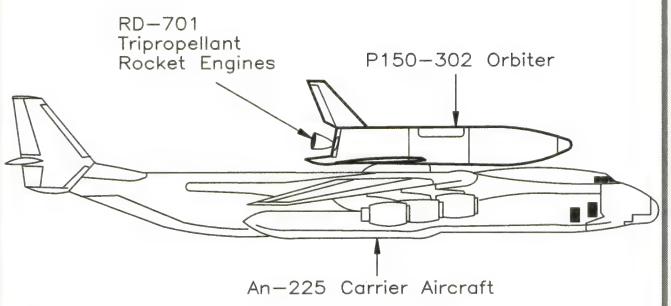

Figure 3. Revised version of HOTOL with Tri-propellant rocket engine. (Courtesy British Aerospace)

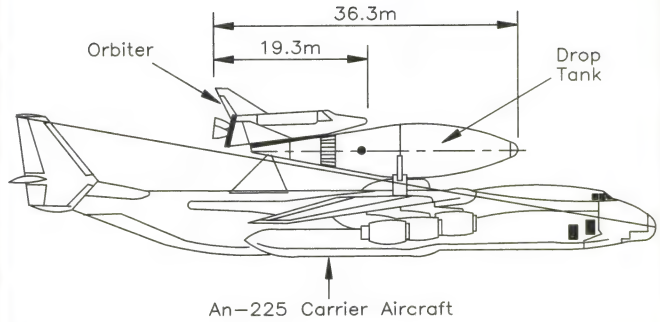

Figure 4. General design of the MAKS Multi-Purpose Aerospace System. (Courtesy British Aerospace)

standing of the technology has progressed significantly, and has led to modifications of design and improvement of payload capabilities. A new insulation system being developed as part of the European Space Agency 'Hermes' project has allowed mass reduction in the heat shielding systems. It is now proposed to use mainly Titanium alloy (TiMMC) material in structural elements, which will considerably improve payload capability by a few hundred kg.

Perhaps the most significant change, is the introduction of a Russian Tripropellant Engine such as the RD-701, which would produce a high initial thrust with oxygen/hydrogen and kerosene, and then a lower thrust oxygen/hydrogen only. Since the vehicle would have higher drag at faster speed in the lower atmosphere, the shape of the revised HOTOL is longer and slimmer, as shown in Figure 3. The change to a tri-propellant motor could add up to 2 tonnes to the payload mass.

The HOTOL design is still evolving, as components of the project, superstructure materials, rocket motors, and heat insulation materials themselves develop. To add some perspective to the HOTOL project, it has emerged that the Soviet Space programme had been developing a concept called MAKS (Multi-Purpose Aerospace System) since about 1982. Shown in general detail in Figure 4, the current version of MAKS consists of a smaller orbiter craft with a tripropellant engine and a drop tank carrying rocket propellants.

Since, however, in the new economics of space developments, there is practically no room for expensive duplication of effort, the final optimised solution could be a fusion of both An-225/HOTOL and MAKS – watch this space! On the economic side, it is estimated that the cost of a typical HOTOL launch of 9 tonnes would be between 10 and £15m.

The Way Ahead

If the Space Station Alpha is anything to go by, the future of manned missions to Mars, for example, is going to be on a co-operative multi-agency, multi-national venture basis. The costs would otherwise be prohibitive for any single domestic budget to shoulder. This could, of course, change if radical technologies are developed. It is perhaps, instructive to consider some possible new technologies.

There are some possible future developments with the rocket principle. If chemical fuels can be developed which carry significantly greater energy release, then larger payloads can be carried to higher earth orbit. In the conventional approach, as the components of the rocket fuel burn and release energy, there is a change in momentum from the gases, which produces an accelerating force. However, if there was a source of energy available to heat a ballast gas, then this energy could expand the gas and generate thrust. It becomes obvious that an enormous source of energy would be required.

The New Energies

Part of the interest in new methods of space travel came from the Strategic Defence Initiative, where previous concepts were taken off the shelf, dusted down and examined for their possible merits. Without dwelling too much on what was wished to be achieved, there was a requirement for super fast, super manoeuvrable vehicles.

One candidate was nuclear power, where a nuclear fission reactor could be used to heat exhaust gases directly, or through electrical heating from generated power. The exhaust velocity of such systems were estimated to be in the region of 8km/s, giving considerable advantage over conventional rocket fuels.

It is instructive, however, to consider a general ground-launched craft, SSTO vehicle, which has available an on-board energy source capable of propelling the craft into lower earth orbit. The power source is considered to heat a neutral propellant, such as methane gas, and expel it as a high temperature rocket exhaust.

Assuming the propellant mass *Ms* is expelled each second at exhaust velocity *Ve*, and assuming all of the energy *E* is converted to kinetic energy of the exhaust, then:

$$E = \frac{1}{2}\sqrt{Ms^2}\,Ve$$

$$Ve = \frac{(2E)}{Ms}$$

This assumes 100% translation of power source into momentum conversion. Using the previous equation, it is possible to look at SSTO solutions with a mass ratio of 2, 3 and 4. Assuming the craft is launched vertically so that the initial lift force has to overcome gravity, then the minimum energy source required to lift a 30 tonne payload into space is in the region of 4,000MW for a mass ratio of three. This is a colossal power source to be contained within a craft with a total mass of 30 tonnes, and clearly, none are available at present to achieve this target function. Based on the cost of metered electricity, this is equivalent to a £50,000 electric bill!

There could be some advantage in a horizontal take-off craft which could throttle up to higher accelerations as the load of the ballast fuel decreased during the ascent. This could reduce the on-board power source to around 3,000MW.

One long term proposal is to utilise the energy released when anti-matter interacts with matter. Anti-matter in the form of anti-protons is used extensively in the high energy research facilities at CERN, Geneva, and elsewhere, to probe the very nature of the structure of normal matter. At present, extremely small amounts (Femtogrammes (10^{-15}g)) of anti-matter are being created and even temporarily stored for such experiments. Calculations show that something like 50mg of anti-protons would be required to react with ordinary hydrogen to place a 30 tonne payload into low earth orbit. There is the requirement, therefore, to boost production of anti-protons by a factor of some 1014 before it could be a practical energy source.

One of the more critical components of an anti-matter propulsion system would be the rocket motor shown in Figure 5. A porous Tungsten block, through which propellant gas is passing, acts to couple energy released from the central hydrogen annihilation chamber. Gamma rays and sub-atomic particles from the annihilation reaction are absorbed in the Tungsten block. Efficiencies of between 30 and 40% are anticipated for conversion of mass energy to thrust energy.

The Joker in the Pack

After being savaged by the hounds of high energy Physics establishments, the researchers in the Cold Fusion community have returned to their laboratories to heal their wounds, astound their accusers and file patents. In any review of future possible technologies for energy derived propulsion in space, it would be wise not to discount Cold Fusion.

There are now a range of processes which exhibit 'anomalous' excess energy production, involving Deuterium and even 'normal' Hydrogen. One recent addition and which has desirable features for space propulsion, is the discovery by Professor Francesco Piantelli and colleagues at the University of Siena. It was discovered that if a bar of nickel is cycled through Hydrogen and then Deuterium containing atmosphere, and is raised in temperature by initially passing a current through a coil of Palladium wire wrapped round the element of Nickel, then excess heat is observed. Initial experiments indicated a modest excess of 50W, but there is every expectation that the process can be scaled up significantly.

The field of Cold Fusion is at present developing, but not in the normal arena of scientific debate. When the dust does settle, however, there are some key parameters of systems which will have a direct relevance to space propulsion vehicles. One such parameter is the rate of energy production in W/cm^3, as outlined in Table 3.

If heat is released at rate of 100W/cm^3 throughout a Cold Fusion system, such as the of the 'hot Nickel' technology, then a rocket system with a 'core' volume of 10m^3 would be able to make available 1,000MW of heat energy to activate a ballast propellant gas. The propellant gas would be pumped through the 'core' in a similar way to cooling gases in a gas cooled nuclear reactor. Nickel, however, has a relatively low melting point of 1,453°C. This could limit the exhaust velocity of the propellant. It is clear, however, that the critical science for Cold Fusion as an energy source for rocket propulsion using such a technology, is Materials Science.

If preliminary findings are anything to go by, however, one of the embarrassing problems with a Nickel 'cold fusion' rocket is that it would be difficult to turn 'off' once it has been turned on. Also, there would also be the risk of meltdown due to instabilities in reaction rates.

Figure 6 indicates what a Cold Fusion rocket unit might look like. Eugene F. Mallove, author of Fire From Ice, has already given presentations on the prospects of Cold Fusion as an energy source for Space Travel, and a number of researchers are considering Cold Fusion as an energy source, to replace 30kg packs of Plutonium already used for deep space probes.

Missing Pieces of the Puzzle

Perhaps, however, there are pieces of the jigsaw of the Laws of Physics which are as yet missing, and the eventual solution to the fundamental problems of space propulsion must wait until these are discovered. There is still considerable confusion about the nature of gravity and the possible existence of gravitons which mediate the gravitational force.

Specific Energy Output (W/cm^2)	10	100	1,000
Power per m^3 (MW)	10	100	1,000
Power per 10m^3 (MW)	10	100	1,000

Table 3. Range of performance from systems with a range of specific rates of energy output.

As part of Einstein's Special Theory of Gravitation, when matter is in motion, it generates its own local gravitational field of infinitesimal size. There have been various concepts about using the 10,000MW power output of a power station to pump liquid mercury along pipes at super high velocities to generate gravitational fields. So far, however, the problem is detecting these effects, rather than using them for useful propulsion.

The familiar equation:

$$E = mc^2$$

Where E is the energy associated with the inertial mass m, at speed of light c, can equally be expressed as:
Where the inertial mass, m, is expressed as the equivalence of the total energy content of matter. There would therefore seem no easy way of reducing the inertial mass of objects without releasing their total energy equivalence

$$m = \frac{E}{c^2}$$

according to this equation.
Moreover, it has been shown that the type of matter, e.g., by atomic composition, has no bearing on the nature of the gravitational force – confirming the 'equivalence' theory of gravitational attraction.

One of the laws of motion central to rocket propulsion – Newton's Third Law – to every action there is an equal and opposite reaction, has a subtle interpretation in modern field theories, in that every entity that is acted upon by a field is also a source of the field.

Summary

The availability of new forms of energy will have very significant impact on both scientific discovery in space, but will shift the strategic balance in other terrestrial technologies to an even greater extent. The key to harnessing such technologies successfully will be Materials Science. The resilience of components at high temperatures will be critical. Thus, technologies of nuclear reactor core materials, aerospace jet engines and aerospace frame fabrication are the key to future space technology.

Further Reading

Mirror matter – *Pioneering Anti-matter Physics*, by Robert L. Forward & Joel Davis. John Wiley & Sons, Inc., 1988.
MAKS – Eastern Promise, by Mark Hempsell & Bob Parkinson, March 1993 Vol 35 No 3, and HOTOL's Secret Engines, by Mark Hempsell, May 1993 Vol 35 No 5. *Spaceflight* – The International Magazine of Space and Astronautics, The British Interplanetary Society.

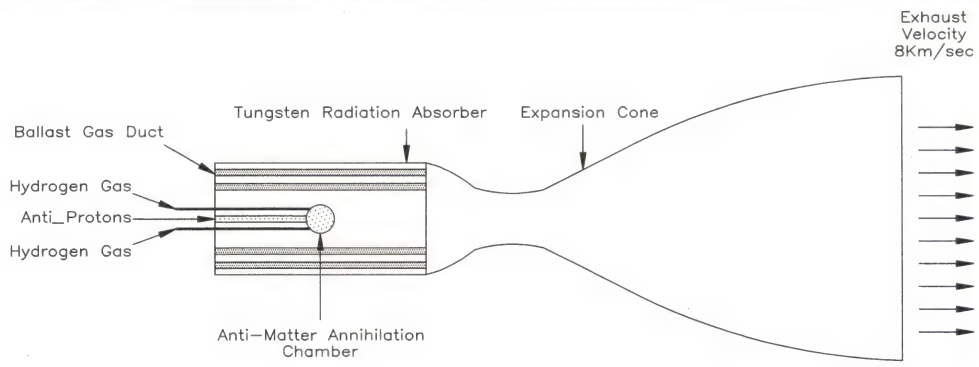

Figure 5. Simplified diagram of anti-matter rocket. (DMC origination)

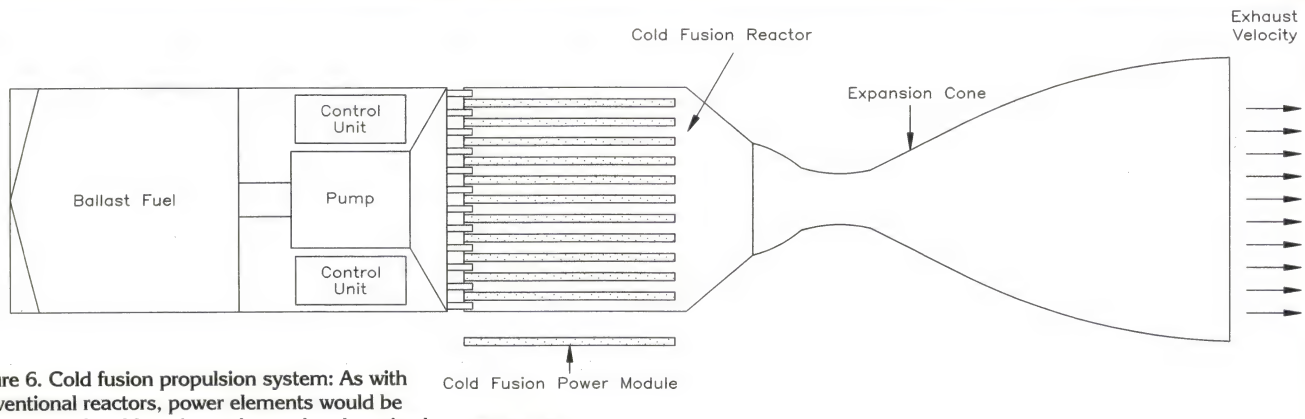

Figure 6. Cold fusion propulsion system: As with conventional reactors, power elements would be modular and be able to be exchanged and serviced within the framework of the core. (DMC origination)

RAPID, ACCURATE ELECTRONICS CAD

Schematic and PCB CAD

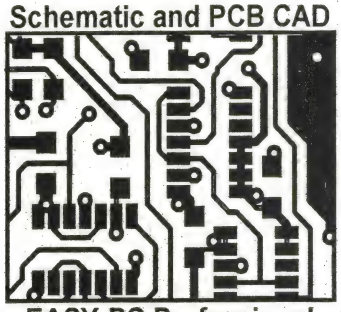

EASY-PC Professional

Electro-magnetic Simulation

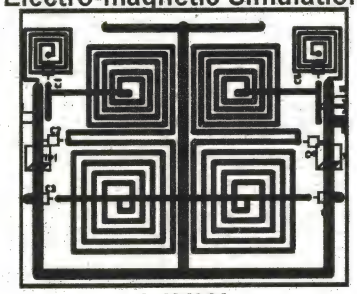

LAYAN

Smith Chart R.F. CAD

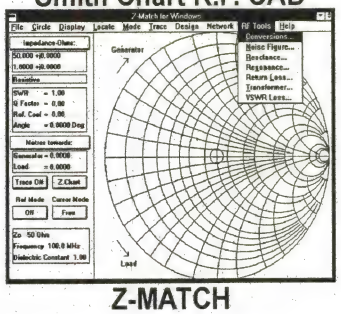

Z-MATCH

Filter Design

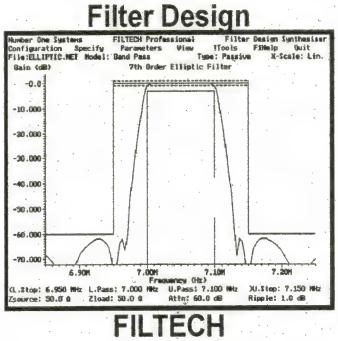

FILTECH

Logic Simulation

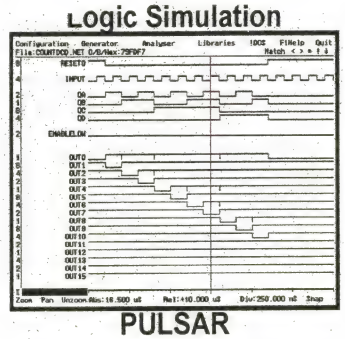

PULSAR

Analogue Simulation

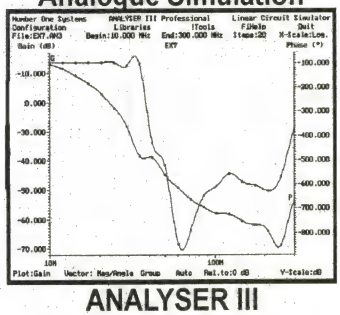

ANALYSER III

Number One Systems

Europe: Ref: MAP, Harding Way, St.Ives, Cambs, PE17 4WR, UK
USA: Ref: MAP, 126 Smith Creek Drive, Los Gatos, CA 95030 USA

Tel: +44 (0) 1480 461778
Fax: +44 (0) 1480 494042
Tel/Fax: (408) 395-0249

From £98.00

ELECTRONICS
The Maplin Magazine

RESERVE YOUR COPY TODAY!

- ★ Do you have difficulty in getting hold of your copy of *Electronics – The Maplin Magazine*?
- ★ Does your Newsagent always sell out before you can get your copy?
- ★ Are you fed up with braving the onslaught of wind, rain and keep fit fanatics in your ceaseless quest to find a copy of your favourite electronics magazine?
- ★ Do you say to your family and friends, "I'm just going outside, I may be gone a little while . . ."?
- ★ Does your dog hide when you return empty handed?
- ★ Do you resort to reading the Beano, Dandy, Viz or other well known 'comics'?

Why not ask your friendly local Newsagent to reserve or deliver every issue of Electronics – The Maplin Magazine? *Fill out the coupon (below), hand it to your Newsagent and you need never miss an issue of* Electronics – The Maplin Magazine.

Dear Newsagent

Please reserve/deliver (delete as applicable) each issue of *Electronics – The Maplin Magazine* for me.

Name _____

Address _____

_____

Signature _____

Electronics – The Maplin Magazine is published monthly and is distributed through your wholesaler by: United Magazine Distribution Ltd., 16-28 Tabernacle Street, London EC2A 4BN. Tel: (0171) 638 4666.

ELECTRONICS *The Maplin Magazine* **Britain's Best Selling Electronics Magazine**

Keeping in Step

by Stephen Waddington

As microprocessor control becomes the vogue in industrial control systems, stepper motors are enjoying an immense rise in popularity and application. Favoured for their unique ability to rotate at discrete angular intervals in synchronisation with an input pulse train, stepper motors are being used in floppy disk head positions, printer heads, wrist watches, photocopy enlargers, automotive and robotic applications.

Compared with conventional electric motors, stepper motors provide great comfort to the control engineer, since without resorting to closed-loop control systems, engineers can be confident that when a definite number of pulses is provided, the shaft will rotate through a known angle before stopping, until a subsequent signal is provided.

Each step is completed quickly, usually within the space of a couple of μs, and when a large number of steps is required, they can be delivered rapidly, sometimes as fast as several thousand times a second. At these high stepping rates, the shaft rotation becomes smooth, and the behaviour resembles that of an ordinary motor.

Step angles are usually within the range of between 1·8 and 90°, with torques ranging from 1μNm – for a wrist watch, perhaps – up to 40Nm, suitable for a machine tool application, where speeds of up to 500rpm are required. The majority of applications fall between these limits, with motors ranging in size from 3 to 150mm.

Operating Principles

The principle on which stepper motors are based is simple. When an iron bar is suspended so that it is free to rotate in a magnetic field, it will attempt to align itself with the field. If the direction of the field is changed, the bar will turn until it is again aligned with the magnetic field, as shown in Figure 1.

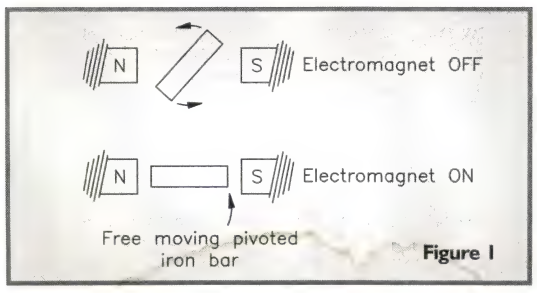

Figure 1. Suspended between two poles of a magnetic field, an iron bar will rotate and attempt to align itself with the field.

Figure 2. Principle of operation of both a magnetic and variable reluctance stepper motor.

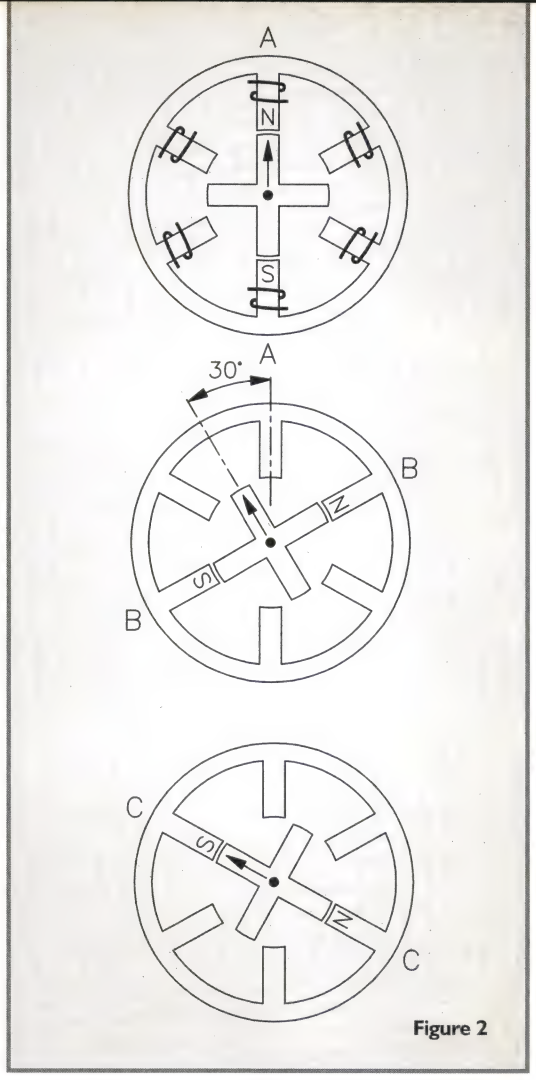

There are three main types of stepper motor, namely magnetic, variable reluctance, and a hybrid design. All three types use the principle of magnetic reluctance, the main differences being the method by which the magnetic fields are produced. As a general rule, stepper motors in any form, do not incorporate a commutator or brushes, which means that they are both robust and reliable. Where brushes and commutator windings are used in motor designs, the motor will suffer from deterioration in time, as the windings age, and brushes wear.

For the magnetic and variable reluctance stepper motor types, the fields are produced solely by sets of stationary current carrying windings. The hybrid type also has sets of windings, but the addition of a permanent magnet on the rotor gives rise to the description 'hybrid'. Although all three work on similar principles, because of their individual constructions, the magnetic and variable reluctance types are best suited for large step angles (7·5, 15, and 30°), while the hybrid type is most appropriate for small stepping angles (1·8, 2·5, and 5°).

Magnetic and Variable Reluctance Motors

The magnetic and variable reluctance motors are of a similar form, and so will be dealt with together. A variable reluctance device has a stator containing a number of poles, each of which carries field windings, and a rotor, constructed essentially from a magnet in the case of the magnetic stepper motor, or a stack of steel laminations in the case of the variable reluctance design.

Here, the difference between the magnetic and variable reluctance type motors begins and ends. The magnetic type motor is the earlier design, however, the variable reluctance motor is favoured today because of its reduced inertia and superior torque response.

The stator can have any number of pairs of two-phase poles, as shown in Figure 2. Diametrically opposite windings are wound in opposing directions, creating a magnetic

field in the intervening space when current is applied. There is a very small air-gap – typically between 0·02 and 0·2mm – between rotor and stator teeth. When no current is flowing in any of the stator cores, the rotor is completely free to rotate.

If the winding centres are connected to a common positive supply terminal as shown in Figure 2, and diametrically opposite winding terminals connected in turn to the negative supply terminal, magnetic fields A, B, and C are induced. The rotor will follow, aligning itself to the moving magnetic field swept between the pairs of opposing poles.

By repetitively switching the phases on in sequence (A, B, C, A, B, C, etc.), the rotor will rotate clockwise, while if the sequence is reversed (C, B, A, C, B, A, etc.), the rotor will rotate anticlockwise. This method of rotational control is called one-step-on, since each phase is fired at a time, exciting the rotor to execute a single step.

In the example shown, the basic step angle is 30°, however, this could be reduced by increasing the number of poles on both the rotor and stator. A simplified formula linking the three variables, allows the number of steps per revolution to be determined in accordance with the equation:

$$N = P \times R$$

Where:
N = Number of steps per revolution
P = Number of phases
R = Number of rotor teeth

Step size in degrees, is equal to the number of degrees in a circle, divided by the number of steps per revolution:

$$S = \frac{360^\circ}{N}$$

Where:
S = Step size

Thus, for a 4-phase motor with 50 rotor teeth:

$$N = 4 \times 50 = 200$$

(200 steps per revolution), and step size equals:

$$S = \frac{360^\circ}{200} = 1{\cdot}8^\circ$$

The direction of rotation is determined by the sequence in which each of the phases is energised, while the speed of rotation is controlled by the frequency of switching between phases. Note that the polarity of the energising current is not significant. The rotor will be aligned equally well, regardless of the direction of the current. Where the current is important, is in fixing the level of torque to hold the rotor in position. The greater the coil current, the larger the holding torque able to maintain the rotor in position.

Hybrid Motors

A cross-sectional view of a typical 1·8° step hybrid motor is shown in Figure 3. The stator has eight main poles, each with five teeth. Each main pole carries a simple coil, while the rotor is split into two sections, each with 50 teeth, separated by a permanent magnet. The rotor teeth share the same pitch as the teeth on the stator poles, but are offset slightly from each other.

The permanent magnet within the rotor section is axially magnetised, so that one set of rotor teeth is given a North polarity and the other a South. While no current flows in the coil windings, the sole source of magnetic flux across the air gap is provided by the permanent magnet. The magnetic flux crosses the air gap from the North end of the rotor, into the stator poles, flows axially along the body of the stator, and returns to the magnet by crossing the air gap to the South end of the rotor.

If there were no offset between the two sets of rotor teeth, there would be a strong alignment torque when the rotor was turned, and each time the stator teeth fell in line with the rotor teeth, a state of equilibrium would be achieved. This would ultimately cause resistance to the rotation of the rotor.

The eight coils are connected together, to form two phase-windings. The coils on poles 1, 3, 5 and 7 form phase A, while those on 2, 4, 6 and 8 form phase B. When phase A carries positive current, stator poles 1 and 5 are magnetised as South, and poles 3 and 7 become North.

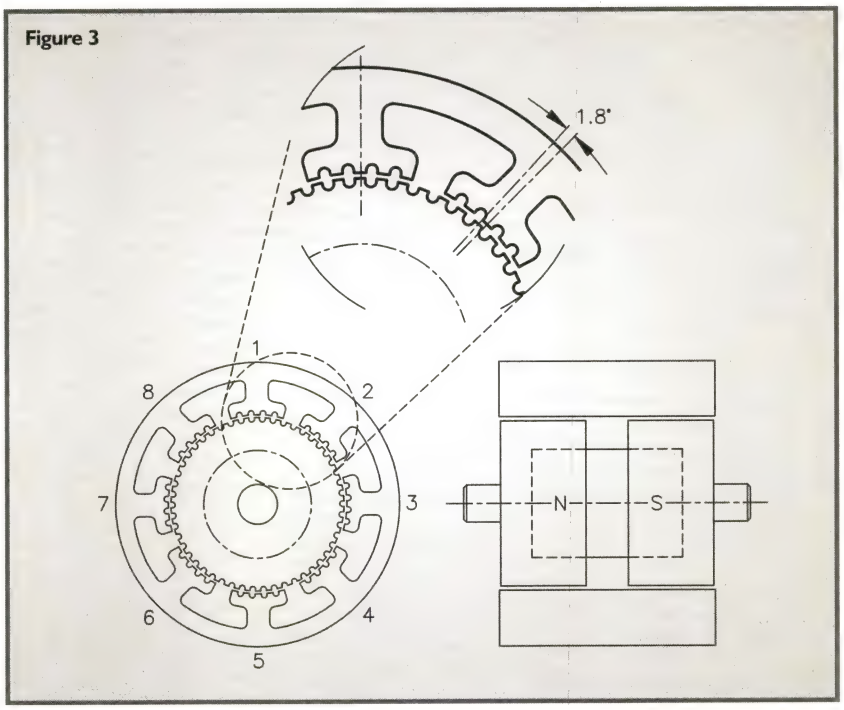

Figure 3. Hybrid stepper motor.

The teeth on the North end of the rotor are attracted to poles 1 and 5, while the offset teeth at the South end of the rotor are attracted in line with the teeth on poles 3 and 7.

The motor is continually stepped by energising the phase in the sequence (+A, –B, –A, +B, +A, etc.). A bipolar power supply is required to alternate the magnetic fields. Should this not be available, more complex coil windings are required. Instead of singular coils, each pole is wound with two identical coils wound in opposite directions. This enables the pole to be magnetised either North or South, simply by switching between the two windings.

Motor Characteristics

Besides the step angle, the next most important facet of a stepper motor design is the torque handling capability. This must be considered to ensure that the motor is able to deliver the torque required to sustain the load driven by the motor.

There are a number of variables which contribute to the torque handling of a given motor, including the shape of both the rotor and the stator teeth, and the positioning of the stator windings. Let's consider for simplicity, the 3-phase variable reluctance motor shown in Figure 2, discussed earlier. A typical torque-displacement curve for this motor is shown in Figure 4.

The true step position in the absence of a load, is at the origin of Figure 4. This is where the rotor would come to rest in the absence of a load. If we imagine the rotor is initially at this position, and then consider that a clockwise load (T_L) is applied, the rotor will move clockwise, and as it does, will progressively develop more anticlockwise torque. The equilibrium position will be attained when the motor torque is equal and opposite to the load torque. The corresponding angular displacement from the true step position is the step position error (θe).

The existence of the step position error is one of the disadvantages of the stepper motor. The motor designer attempts to combat the problem, by aiming to produce

Figure 4. Torque displacement curve.

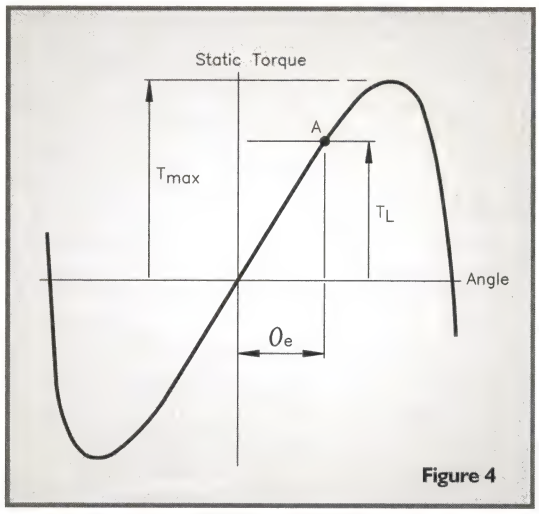

5. This is the graph stepper motor manufacturers will quote, not wishing to highlight flaws in their product.

Rudimentary Control System

A simple stepper motor control system is shown in Figure 6. The drive contains the electronic switching circuit, which supplies the motor with the correct signal sequences to cause clockwise and anticlockwise rotation. We shall examine methods of stepper motor control later. The output is the angular position of the motor shaft, while the there are two inputs, namely direction and step frequency. Each time a pulse is supplied on the step frequency line, the motor will rotate through a single step. The shaft will then remain in position until the next pulse is supplied. The state of the direction line, determines whether the motor rotates clockwise or anticlockwise.

The step frequency will generally be produced by an oscillator circuit, itself gated by a digital control circuit or microprocessor, as shown in Figure 7. When pulses are required to be delivered to the drive circuit, the control line is set high. This enables the oscillator output to be translated through the AND gate to the stepper motor drive circuitry. Once the required number of steps is reached, the control line is set low, gating the oscillator circuit. This is demonstrated for a three-step sequence in Figure 8.

Figure 8 identifies an important feature of stepper motor control. Note that the step action is not perfect. Instead, the motor takes a finite time to shift from one

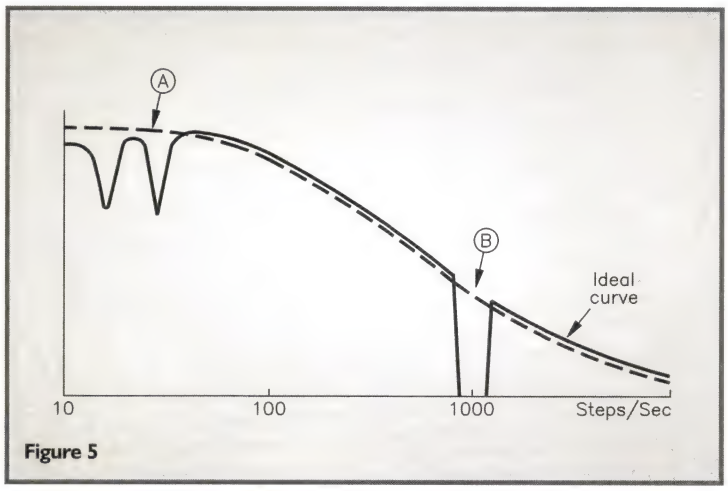

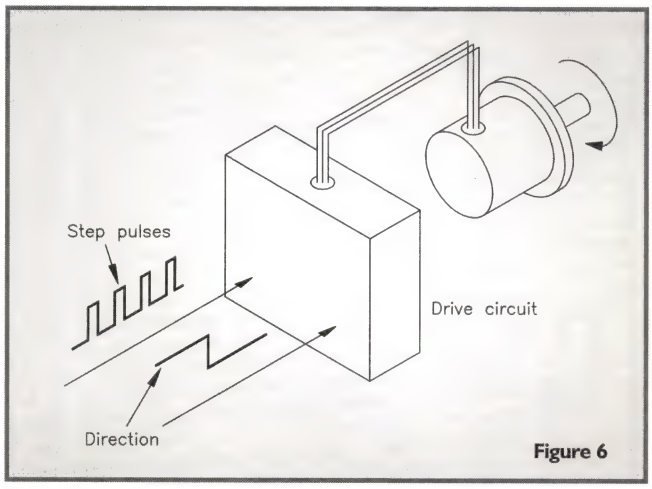

Figure 5. Torque response against step frequency, showing instabilities due to resonance and natural frequency.

Figure 6. Simple stepper motor control system.

a steep torque-angle curve around the step position, and the user has to be aware of the problem and select a motor with sufficiently steep curve to maintain the error within acceptable limits. In some cases, this may mean selecting a motor with a higher peak torque than would otherwise be necessary, simply to obtain a sufficient torque rating at the step position.

Providing the load torque is less than T_{max} – as shown in Figure 4 – a stable rest position is obtained. If the load torque exceeds T_{max}, the rotor will be unable to maintain its step position, and will stall. The value of the holding torque therefore conveys an idea of the overall torque-handling capability of the motor when selecting a motor for a particular application.

Instability

While it is clear that torque varies with speed, there are additional considerations which must be made for a given stepper motor. In practice, torque versus speed curves will display severe dips at certain stepping frequencies, as shown in Figure 5. There are two distinct mechanisms responsible for the problems outlined. Resonance manifests itself at low frequencies, as shown by point a in Figure 5. When the stepping frequency matches, the natural frequency of the motor, the motor oscillations become exaggerated, forcing the motor to stall or fall out of synchronisation.

The second phenomenon occurs because, at certain stepping rates, it is possible for the complete motor and control system to exhibit positive feedback and become unstable. This instability usually occurs at relatively high stepping rates, as shown by point b in Figure 5, well above the resonance regions. The resulting dips in the torque-speed curve are extremely sensitive to the degree of viscous damping present in the system, and consequently, it is not uncommon to find that a severe dip which is apparent on a warm day, will disappear on a cold day.

An ideal torque curve, as quoted by the majority of manufacturers, is illustrated by the dashed line in Figure

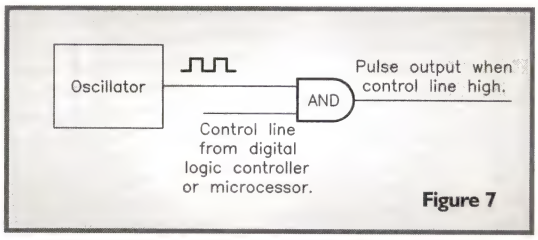

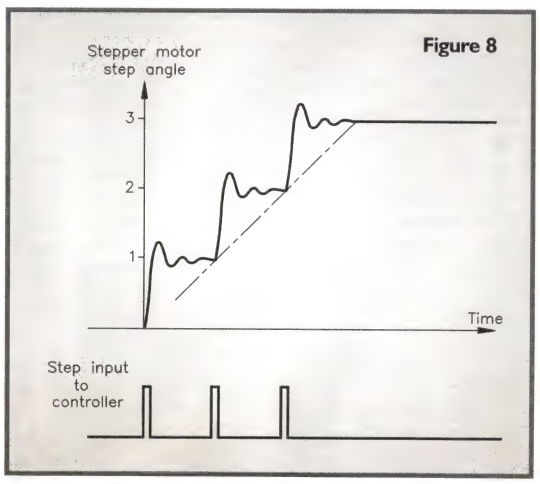

Figure 7. Step frequency is gated to control motor operation.

Figure 8. Typically stepper motor response to a low-frequency train of pulses.

position to the next, and then overshoots and oscillates, prior to coming to rest at the new position. Overall, single-step times vary between 5 to 100ms, depending on the motor size, step angle and nature of the load. This is often fast enough to be unobserved, although individual steps can usually be heard.

Variable Speeds

While it is useful to be able to drive a motor a constant rate, applications are limited to devices which act continuously, such as watches and clocks. The majority of applications require greater rotational speeds and a more varied performance. For example, a computer user wanting to retrieve data from a floppy disk, does not want to wait five minutes while a stepper motor positions the head for a read operation. Instead, a swift movement is required to initially position the read-head over the disk, followed by a slower operation during the actual read operation, as the read-head scans the disk.

To operate a stepper motor at high speeds, requires the step frequency to be driven harder. At high speeds, the motor cannot come to rest as it does for single-step operations. Instead, the rotor velocity becomes quite smooth, similar in operation to a conventional motor. The transition from single-step to operation at high speed is termed slewing. When motors are in their slewing range, they tend to emit an audible whine, with a fundamental frequency equal to the frequency of the stepping rate.

Nevertheless, throughout its slewing range, a motor maintains the vital relationship between input step pulses and angular step movement. Pushed to the limit, some

One–phase–on	Two–phase–on	Half stepping
A	AB	A
B	BC	AB
C	CA	B
A	AB	BC
B	BC	C
C	CA	CA
A	AB	A
B	BC	AB
C	CA	B

Figure 9

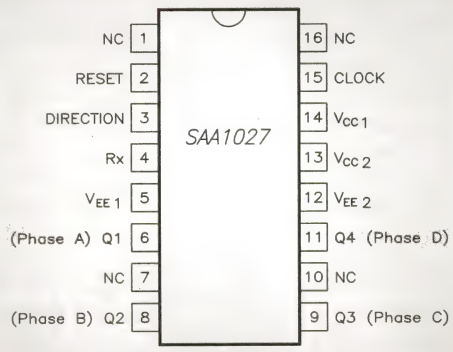

Figure 10

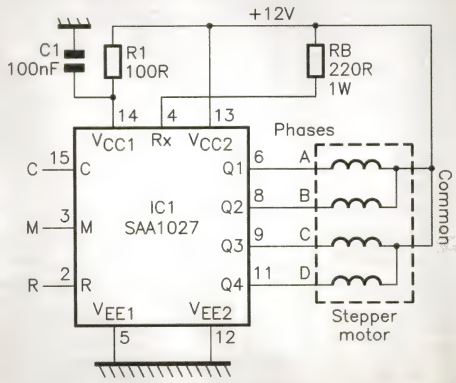

Figure 11

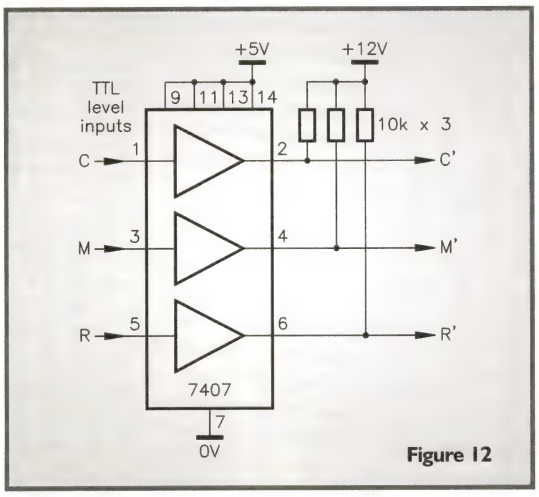

Figure 12

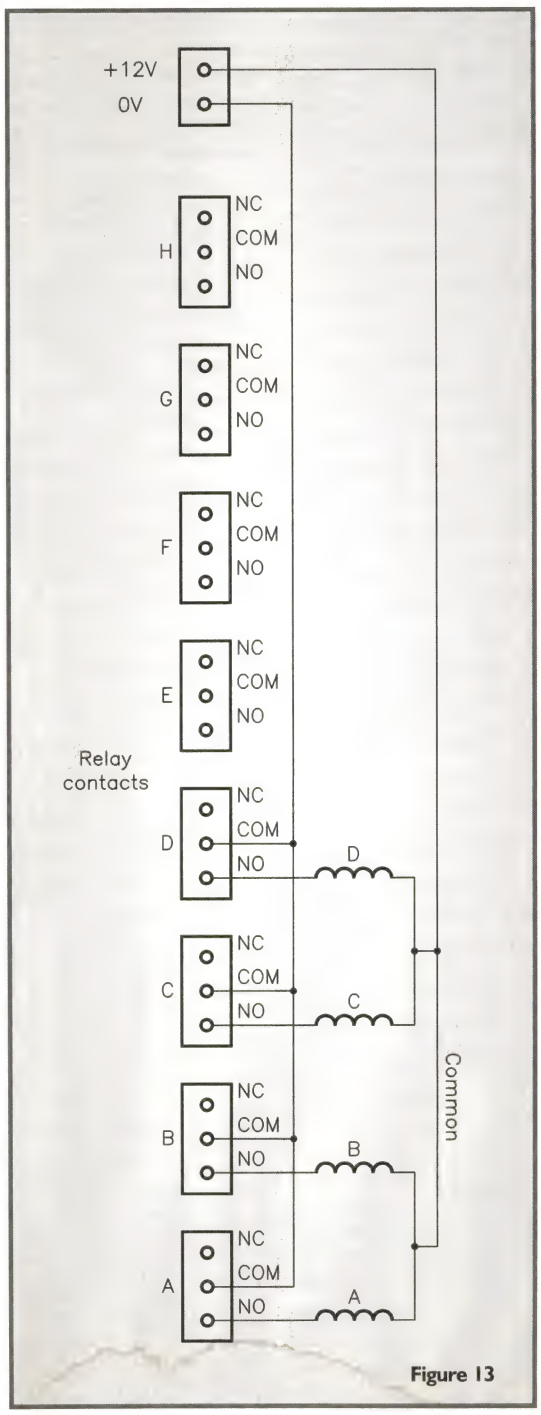

Figure 13

Figure 9. Stepping patterns for, one-phase-on, two-phase-on and half stepping modes.

Figure 10. Pin out diagram of SAA1027.

Figure 11. Stepper motor interface based on the SAA1027.

Figure 12. TTL level converter circuit.

Figure 13. Connecting the stepper motor to the Parallel Interface Relay Card.

motors are capable of up to 20,000 steps per second, while remaining in synchronisation with the command pulses.

While stepper motors are capable of high rotational speeds, they have to be ramped-up from a standing start. A motor cannot lock on to a train of command pulses at a rate of 2,000 steps per second. Instead, it has to be started at a more modest rate before being ramped up to the desired speed. Similarly, it is unrealistic to expect a stepper motor rotating at speed to suddenly stop when step pulses cease. The stored kinetic energy will cause the motor to overrun, so that the number of motor steps will be greater than the number of command pulses.

In undemanding applications, ramping up or down can be undertaken slowly and spread over a large number of steps. But, if a high stepping rate is required quickly, the timing of individual step pulses must be precise. If the stepping rate is increased or ceased too quickly, the motor will be unable to keep in step, and will stall. While this will not do any damage to the motor itself, it will destroy the precise relationship between step input and angular output.

Stepping Out

We have already seen how to step the motor through single increments by energising each of the phases in turn. Although this one-phase-on mode is the simplest and most widely used, these are two other modes which are also frequently used. These are known as two-phase-on, and half-stepping mode. The two-phase-on mode provides superior torque handling, by effectively combining the torque capability of each phase. The motor response is also better damped than the single step response which typifies one-phase-on mode. The half-stepping mode permits the physical step angle of the motor to be effectively halved, improving resolution, while also producing a smoother shaft rotation.

In the two-phase-on mode, two phases are excited simultaneously. Consider the variable reluctance motor in Figure 2. When phases A and B are energised together, the rotor experiences torques from both phases, and comes to rest at a point mid-way between the two positions. If the phases are switched in sequence AB, BC, CA, AB, etc., the motor will take full 30° steps, as in the one-phase-on mode, but its equilibrium positions will be interleaved between the full-step positions, providing a greater torque rating.

Half-stepping is achieved by combining one-phase-on and two-phase-on control. By exciting the phases in the sequence A, AB, B, BC, etc., the rotor will rotate in steps of half the full step angle, or 15° for our example. A summary of stepping patterns for each control method is shown in Figure 9.

Driving Force

While we have considered the aspects of a stepper motor which contribute to its performance, we have not yet looked in detail at the drive circuitry used to issue the step commands. Both the manufacturer's defined characteristic and the efficiency of the driving circuitry, contribute to

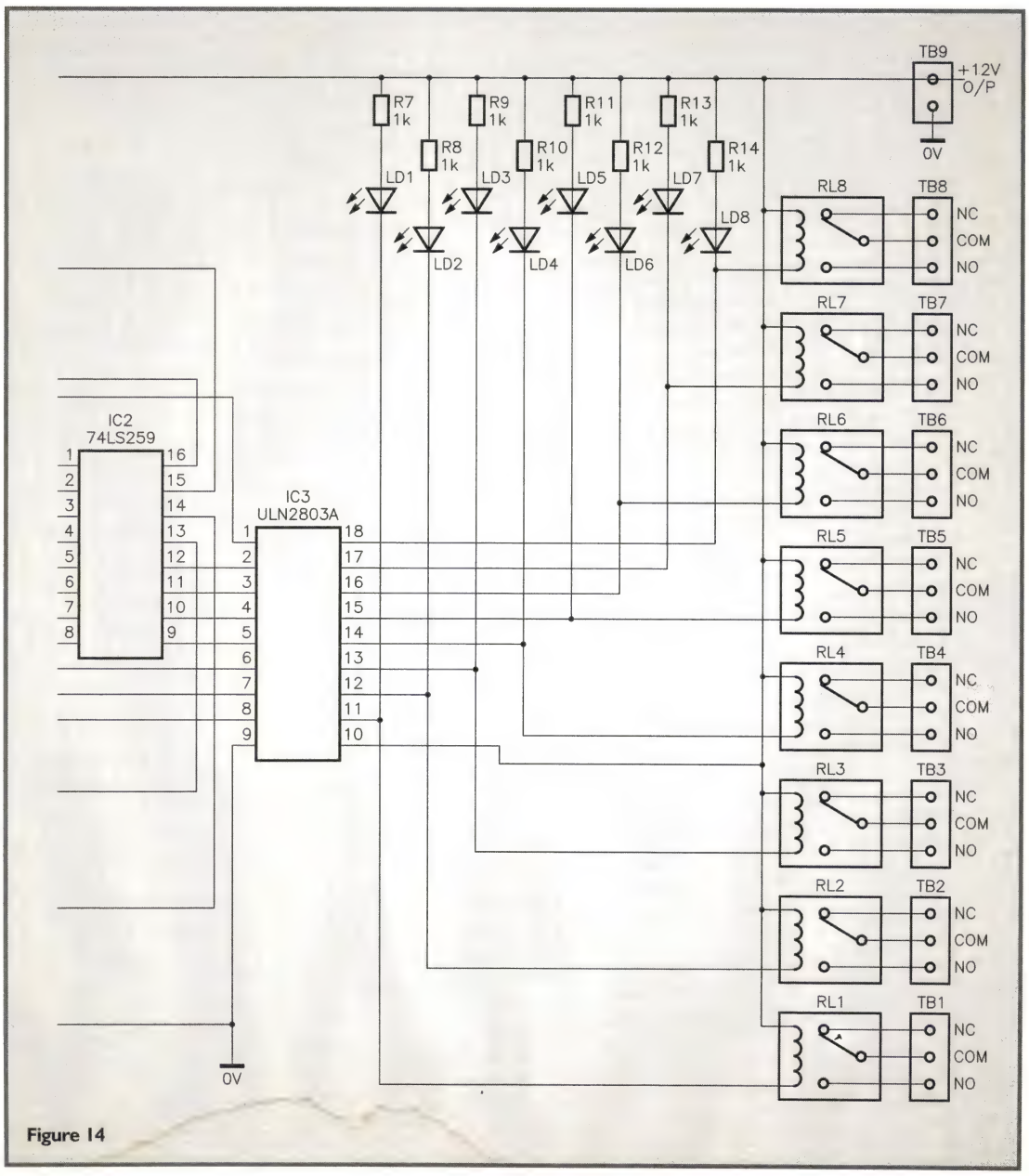

Figure 14. Output stage of the Parallel Interface Relay Card.

the overall performance of a stepper motor. An efficient motor design is useless without an appropriate driver.

In many cases, a PC or microcontroller and appropriate interface circuitry is used to directly issue the appropriate sequence of signals directly to the stepper motor. Alternatively, for light-duty applications, dedicated stepper motor drivers are used. We will consider both options in due course.

Single-Chip Controller

In the simple control system outlined earlier, we considered a circuit which would deliver pulses in sequence to each of the phases of a stepper motor. An input line was used to select the direction of the motor, with a second used to dictate the step speed. The circuit outlined is based upon a specialised stepper motor driver chip.

One such device, shown in Figure 10, is the SAA1027 from Mullard, capable of driving 4-phase unipolar stepper motors. This means it is suitable for driving magnetic and variable reluctance motors, or hybrid devices where a split supply is available. The device is not capable of driving bipolar hybrid motors, which have two opposite windings on each phase, as outlined earlier. Table 1 shows the technical specification of a 4-phase stepper motor stocked by Maplin (FT73Q).

The SAA1027 includes all necessary counter and shift logic to drive a stepper motor, as well as output drivers for each of the four phases. Assuming the direction input at pin 3 is held low for clockwise rotation, when an input pulse is supplied to the step input at pin 15, the device issues a pulse at Q1. A subsequent pulse causes the device to issue a pulse at Q2, followed by Q3 and Q4. The sequence will continue for each pulse supplied to pin 15 in sequence Q1, Q2, Q3, Q4, Q1, etc. An additional input is provided at pin 2 to reset the internal counters, should the chip fail at any stage.

Figure 11 shows a typical stepper motor interface based on the SAA1027. The chip, together with the necessary external parts and a PCB, is available as a kit (Maplin GD14Q), suitable for driving 4-phase magnetic or variable reluctance motors. Once constructed, the driver circuitry is small enough to be mounted close to the motor. Where hybrid stepper motors are to be controlled, a split power supply is required, demanding additional switching circuitry.

The chip operates from a 12V supply rail, however, its inputs are not strictly TTL compatible, and thus, transistor or open-collector drivers will normally be required to lift the inputs up to the 12V rail. Figure 12 shows a simple method of doing this, although it will require additional circuitry to be added to the existing design.

In Figure 12, three parts of a 7407 hex non-inverting, open-collector buffer IC are used to perform the conversion from TTL to 12V levels. The TTL level inputs at C, M and R, on the left, are duplicated at the outputs on the right, but raised to 12V in the logic 1 state. Each of these must have a pull-up resistor. A 10kΩ is usually adequate, taking the inputs to just over 1mA each in the logic 0 state. As with all TTL circuitry, the inputs of the unused gates, in this case, pins 9, 11 and 13, must be con-

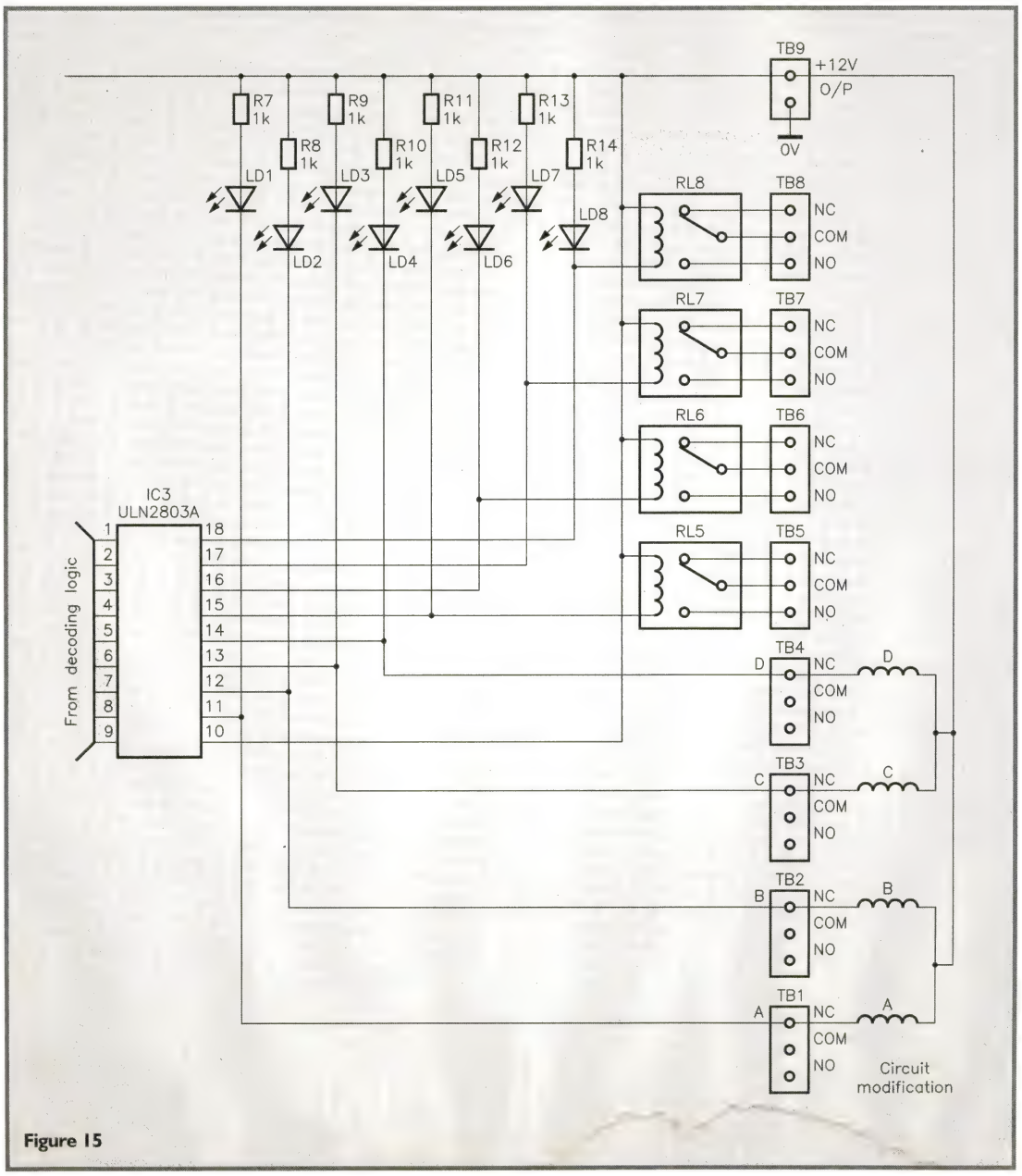

Figure 15

Figure 15. Direct stepper motor to Darlington driver connection.

Step angle:	7·5°
Current per phase:	130mA
Resistance per phase:	94Ω
Inductance per phase:	43mH
Dynamic torque (@ 10 pulses/s):	80g/cm (8mNm)
Response frequency:	300Hz
Rotor inertia:	4g/cm2
Weight:	57g
Dimensions (dia. × depth):	35 × 25mm
Drive shaft diameter:	3mm

Table 1. Technical specification of a 4-phase stepper motor obtainable from the Maplin Catalogue.

Power supply:	15V DC regulated 12V DC 800mA
Maximum current drain:	500mA (all relays on)
Relay contact rating:	3A DC/AC resistive 1·5A inductive 24V DC
Computer interface:	Parallel printer port

Table 2. Technical specification for Maplin parallel interface relay card.

nected to +5V, and not left floating. With the conversion circuitry in place, the driver circuit can be manipulated using a microprocessor or additional control logic.

PC Control

The other method of control, distinct from a specialised stepper motor control board, is the use of a microprocessor or PC. In essence, the two are very similar. Instead of pure hardware control, software is used to control the signals to each of the stepper motor phases.

For ease of experimentation, we will consider PC control, however, the concepts outlined apply equally to microprocessor control. A parallel interface relay card is used to interface the computer to the stepper motor. This enables signals from the computer to be manipulated in a form suitable for the stepper motor.

The Maplin parallel interface relay card allows up to eight independent relays to be controlled from a PC, via the Centronics printer port – see the technical specification outlined in Table 2. Indeed, the device behaves like a printer, thus avoiding the necessity for complex decoding logic, or low-level software drivers. The relays are controlled simply by 'printing' an ASCII character, chosen to represent the relay identified. The eight relays are each identified with the letters a to h. From BASIC, the statement LPRINT "a", will switch the first relay on, and the statement LPRINT "A", will turn it off again.

Using the Maplin interface makes programming a sequence to control a stepper motor very straightforward. Consider the same 4-phase motor as discussed in the previous control example. Each of the phases of the stepper motor A to D, should be connected to the corresponding NO (normally-off) relay terminal A to D, as shown in Figure 13. Meanwhile, a 0V supply should be connected to each of the COM (Common) terminals, and finally, the centre-windings connected to the 12V supply.

By switching each of the relays in turn with a short delay, it is very easy to quickly build up a control program. The rate at which the relays and consequently, each of the stepper motor phases is fired, dictates the speed of rotation, and a loop can be used to repeat the process. Listing 1 outlines a Microsoft QBASIC program to drive the stepper motor in a clockwise direction. An explanation of each of the subroutines follows:

- **SUB fwd** generates a sequence of pulses in turn on phases A, B, C and finally, D. Correspondingly, this causes the motor to move clockwise through four steps – equivalent to 30°.
- **SUB delay** is essentially a loop, which forces a delay of duration s. Called from SUB fwd, this controls the speed of rotation.

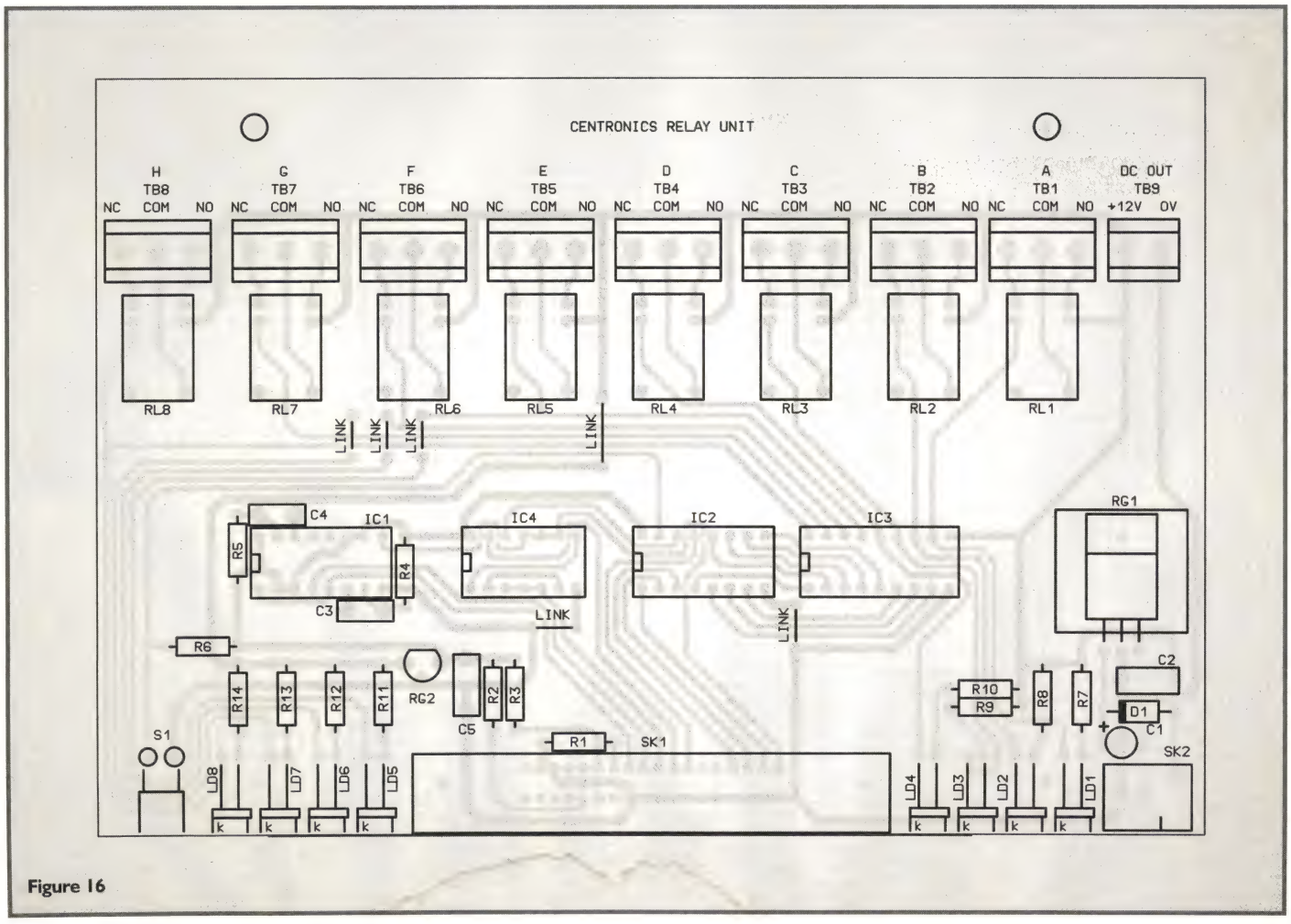

Figure 16. Modification to Parallel Interface Relay Card to enable direct Darlington driver to stepper motor connection.

Figure 16

● **SUB motor** is a loop which calls SUB fwd, causing continuous rotation. With I set to 12, the motor will rotate through a complete revolution.

With these three subroutines established, it becomes easy to see how other step sequences might be generated. For example, Listing 2 gives a variation on SUB fwd, generating a sequence of pulses which will cause the motor to rotate in a anticlockwise direction.

Earlier, we saw how control sequences could be generated to produce a greater torque rating and half-step sequences. The subroutines SUB fwd and SUB bwd are easily adapted to generate the pulse sequences for clockwise and anticlockwise operation in both two-phase-on and half-stepping modes. These are shown in Listings 3 and 4, respectively.

If the latter routines are utilised, notice how the motor torque is distinctly greater for the two-phase-on mode, as predicted. This can be seen, simply by trying to stop the motor in one-phase-on and two-phase-on modes, alternatively. The halving of the stepping distance is also obvious for half-stepping modes, and this can be observed simply by watching the motor.

The code outlined above should be easily translated to other dialects of BASIC. Many dialects incorporate an accurate time function, which can be used to add precision to the timing element of the controller.

Avoiding Relay Damage

Used at high speeds, the relays on the parallel interface will begin to complain. Indeed, there is a danger of prematurely destroying the devices, or fusing the contacts through continuous operation at high frequency. The obvious way round this problem, is to remove the relays from the interface card. The relays are driven by a ULN2803A Darlington driver, as shown in Figure 14. This is capable of delivering 500mA at up to 50V. Since the stepper motor phases require a current of 130mA, the phases can be connected directly to the Darlington driver, as shown in Figure 15. Where the Darlington driver is unable to supply the necessary current, a general-purpose transistor could be used to increase the current level.

To physically connect the relays directly to the Darlington driver requires a simple modification to the Parallel Interface Relay Card PCB. The relays A to D are removed, and the link illustrated in Figure 16 is added in each instance. This destroys the labelling convention on the board, as the NC (normally closed) terminal in each case now becomes the NO (normally open) terminal. This minor inconvenience cannot be avoided with physically modifying the PCB, and simply means that stickers must be applied to the PCB, outlining the new arrangement. With the PCB modification made, the phase connections need to be switched to the new positions. This complete, the board is ready to work without fear of destruction to the relays.

Buying Stepper Motors

Sourcing stepper motors for projects can be a difficult and expensive process. The Maplin Catalogue has a single variable reluctance device, with a step angle of 7·5°. The motor's specification is outlined in Table 2. The 12V unipolar device is suitable for a variety of construction applications which require low to medium torque, at relatively low current.

But what if you require a greater capacity? While you could consult specialised motor dealers, stepper motors can often be obtained very much cheaper through salvage. I recently purchased a broken dot-matrix printer at a car boot sale for a couple of pounds. The printer used a motor to drive the print platter.

Larger devices can be sourced from old golf-ball or daisy-wheel printers. Other good sources include broken disk drives, or even some modern scrapped cars, which use stepper motors to drive the windscreen wipers.

Identifying each of the phases and the common cores

Listing 1. Routines to drive a 4-phase stepper motor forward in one-phase-on mode.

```
SUB motor
FOR I = 1 TO 12
CALL fwd
NEXT I
END SUB

SUB delay (s)
i = 0: WHILE i <> s
i = i + 1
WEND
END SUB

SUB fwd
t = 5:
LPRINT "a"; : CALL delay(t): LPRINT "A";
LPRINT "b"; : CALL delay(t): LPRINT "B";
LPRINT "c"; : CALL delay(t): LPRINT "C";
LPRINT "d"; : CALL delay(t): LPRINT "D";
END SUB
```

Listing 2. Routine to enable one-phase-on clockwise operation.

```
SUB bwd
t = 5:
LPRINT "d"; : CALL delay(t): LPRINT "D";
LPRINT "c"; : CALL delay(t): LPRINT "C";
LPRINT "b"; : CALL delay(t): LPRINT "B";
LPRINT "a"; : CALL delay(t): LPRINT "A";
END SUB
```

Listing 3. Routines to enable two-phase-on clockwise and anticlockwise.

```
SUB twofwd
t = 5
LPRINT "ab"; : CALL delay(t): LPRINT "AB";
LPRINT "bc"; : CALL delay(t): LPRINT "BC";
LPRINT "cd"; : CALL delay(t): LPRINT "CD";
LPRINT "da"; : CALL delay(t): LPRINT "DA";
END SUB

SUB twobwd
t = 5
LPRINT "da"; : CALL delay(t): LPRINT "DA";
LPRINT "cd"; : CALL delay(t): LPRINT "CD";
LPRINT "bc"; : CALL delay(t): LPRINT "BC";
LPRINT "ab"; : CALL delay(t): LPRINT "AB";
END SUB
```

Listing 4. Routines to enable half stepping clockwise and anticlockwise.

```
SUB halffwd
LPRINT "a"; : CALL delay(t): LPRINT "A";
LPRINT "ab"; : CALL delay(t): LPRINT "AB";
LPRINT "b"; : CALL delay(t): LPRINT "B";
LPRINT "bc"; : CALL delay(t): LPRINT "BC";
LPRINT "c"; : CALL delay(t): LPRINT "C";
LPRINT "cd"; : CALL delay(t): LPRINT "CD";
LPRINT "d"; : CALL delay(t): LPRINT "D";
LPRINT "da"; : CALL delay(t): LPRINT "DA";
END SUB

SUB halfbwd
LPRINT "da"; : CALL delay(t): LPRINT "DA";
LPRINT "d"; : CALL delay(t): LPRINT "D";
LPRINT "cd"; : CALL delay(t): LPRINT "CD";
LPRINT "c"; : CALL delay(t): LPRINT "C";
LPRINT "bc"; : CALL delay(t): LPRINT "BC";
LPRINT "b"; : CALL delay(t): LPRINT "B";
LPRINT "ab"; : CALL delay(t): LPRINT "AB";
LPRINT "a"; : CALL delay(t): LPRINT "A";
END SUB
```

on stepper motors that have been salvaged from scrap dealers can be tricky. However with an ohmmeter and a little trial and error, it is usually quite easy to identify each of the phases and the common connecting cores. The matter is helped by the fact that the majority of motors used in consumer applications are four-phase magnetic or variable reluctance unipolar types. This is because this type of motor is the simplest design, capable of delivering a reasonable resolution without resorting to complex control circuitry.

Further Reading

Industrial Robotics, Bernard Hodges
PC-based Instrumentation and Control, Mike Tooley
Electric Motors and Drives, Austin Hughes
Maplin Electronics Instruction leaflet to the Parallel Interface Relay Card, Order Code XT82D, Price £0.40 *NV*
Maplin Electronics Instruction leaflet to Stepper Motor Driver, Order Code XK04E, Price £0.15 *NV*

Parts List

Stepper Controller Motor Kit,
Order Code LK76H, Price £24.99
(includes Stepper Motor FT73Q, Driver Kit and PCB)
Stepper Motor PCB,
Order Code GD14Q, Price £1.49
Four-phase Stepper Motor,
Order Code FT73Q, Price £19.99
Parallel Interface Relay Card,
Order Code LT08J, Price £37.99

DOOR CHIME – *Continued from page 7.*

If you wish to liven up the (already attractive!) external appearance of the Door Chime casing, you can apply decals of your choice, such as those available from most model/craft shops, stationers, etc., but remember not to stick them between the two casing halves, since this will cause problems when it comes to replacing the batteries. Clean the casing well before applying the decals.

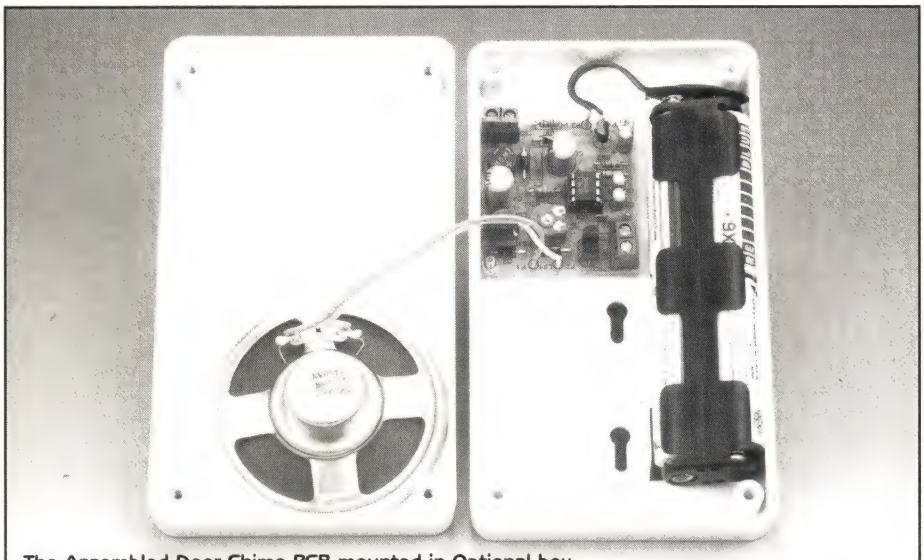

The Assembled Door Chime PCB mounted in Optional box.

Regarding batteries for use in this project, if powering the unit from an AC transformer, you may also wish to install batteries for back-up in the event of mains failure. Ni-Cd cells or non-rechargeable types may be used for this, but remove components D3 and R5 (i.e. disable the charging circuit) if fitting non-rechargeable batteries. For battery power only, it is best to use alkaline batteries, since they will last longer, and are less prone to leakage than cheaper dry cells. It is inadvisable to use Ni-Cd cells for battery power only operation, since they are not well suited to such low-power applications, and will need regular recharging, which would be inconvenient.

Note that the specified box drilling allows the Door Chime unit to be easily detached from its wall mounting, by sliding it up slightly before gently pulling it away from the wall – so long as you do not overtighten the wall mounting screws. Replacing it is a matter of positioning the unit onto the mounting screws, then pulling it downwards slightly to secure it.

DOOR CHIME PARTS LIST

RESISTORS: All 0·6W 1% Metal Film (Unless specified)			
R1	470k	1	(M470K)
R2	1k	1	(M1K)
R3	180k	1	(M180K)
R4	150k	1	(M150K)
R5	820Ω	1	(M820R)
RV1	100k Horizontal Preset Potentiometer	1	(UH06G)
CAPACITORS			
C1,5,7	100nF 50V Ceramic Disc	3	(BX03D)
C2,3	4µ7F 35V Radial Electrolytic	2	(YY33L)
C4	220µF 35V Radial Electrolytic	1	(JL22Y)
C6	220µF 16V Radial Electrolytic	1	(FF13P)
C8	10µF 16V Radial Electrolytic	1	(YY34M)
SEMICONDUCTORS			
IC1	HT2811	1	(BH69A)
RG1	L7808CP	1	(CR15R)
RG2	HT-1030	1	(GV11M)
TR1	BC558	1	(QQ17T)
TR2	BC327	1	(QB66W)
D1-4	1N4001	4	(QL73Q)
BR1	WO1 Bridge Rectifier	1	(QL38R)
MISCELLANEOUS			
TB1,2	2-Way PCB-Mounting Terminal Block	2	(FT38R)
	8-Pin DIL Socket	1	(BL17T)
	1mm Single-ended PCB Pins	1 Pkt	(FL24B)
	PCB	1	(90064)
	Instruction Leaflet	1	(XV68Y)
	Constructors' Guide	1	(XH79L)

OPTIONAL (Not in Kit)			
	8Ω 0·3W Miniature Loudspeaker Type 668	1	(WB13P)
	Bell Push	1	(FS17T)
	AA 500mAh Ni-Cd Battery	4	(AG13P)
	AA Alkaline Battery	4	(ZB47B)
	4 × AA Battery Box	1	(HF29G)
	PP3 Battery Clip	1	(HF28F)
	White ABS Box Type BM11	1	(CC81C)
	Bell Transformer	1	(FL37S)
	4 Pairs of 1in. Velcro Squares	1 Pkt	(FE45Y)
	M2·5 × 10mm Pozi-drive Screw	1 Pkt	(JC68Y)
	M2·5 Steel Nut	1 Pkt	(JD62S)
	Zip Wire	1m	(XR39N)

The Maplin 'Get-You-Working' Service is available for this project, see Constructors' Guide or current Maplin Catalogue for details.

The above items (excluding Optional) are available as a kit, which offers a saving over buying the parts separately.

Order As 90063 (Door Chime) Price £6.99

Please Note: Where 'package' quantities are stated in the Parts List (e.g., packet, strip, reel, etc.), the exact quantity required to build the project will be supplied in the kit.

The following new item (which is included in the kit) is also available separately, but is not shown in the 1996 Maplin Catalogue
Door Chime PCB **Order As 90064 Price £1.99**

Stray Signals

by Point Contact

Metric Conversion

Well, back in the '70s we all had to get used to decimal money, and soon we will all have to get used to (prepacked) food being sold in decimal weights. Though what perverted civil servant decided that goods such as tomatoes and potatoes could still be sold by the pound if sold loose? He clearly does not have shares in weighing machine manufacturers!

PC is undergoing his own little decimal conversion, thanks to a birthday present from Mrs PC. Until recently, PC has done all the drilling involved in his light metalwork with a mixture of number drills and imperial fractional sizes: No. 34 for 6BA clear, No. 27 for 4BA and so on up to 0BA, with $^1/_4$in., $^5/_{16}$in., etc., up to $^3/_8$in. for larger holes. (For even larger holes up to 20mm there is a splendid tapered 'cone cutter', and beyond that a small selection of Q-MAX cutters.) But with the occasional drill getting borrowed, mislaid or broken, some gaps in the rows of drills were beginning to appear in the block of wood that does duty as a drill stand. So at my suggestion, Mrs PC bought me a splendid set of 61 drills in a natty open-out metal case, covering 1mm to 6mm in 0·1mm steps, although you *can* still get whole-number and fractional-size drills. Still, one must keep up with the times, it is just that now PC has to remember a new set of sizes, such as 3·8mm for 4BA clear. (For rough work, you could just remember 4mm for 4BA clear – but don't use 6mm for 6BA clear!)

Surely the answer, though, is to use metric nuts and bolts; 3mm for M3 clear, etc., what could be simpler? Ah, but PC has a copious supply of nuts and bolts all the way from 0BA to 10BA inclusive, and some streak of Scottish ancestry in his make-up revolts at the thought of throwing away all that good stock. So this old dog will just have to learn some new tricks.

A Hallowed Bug

Such are the mysterious ways of software. Joining a new firm, a colleague and long-time friend of PC was recently required to write an additional routine to run under an existing main program on a complex piece of kit involving electrics, mechanics and pneumatics, you name it, forming an advanced sorting system. His work progressed well, but on buttoning it in to the kit, it malfunctioned under certain circumstances. Eventually proving that there was no fault in his routine, he traced the problem to a bug in the main program, which (being a skilled and ingenious worker) he quite quickly and easily fixed. His routine and the associated part of the kit then worked fine – but there were howls of dismay from everybody else, whose routines were all crashing around their ears.

It appeared that the bug in the main program had long been known about, but when it first surfaced, there was not time to fix it, so the software engineer developing the first routine had simply patched round it. Succeeding routines had all taken the same easy way out, so that the bug was effectively set in concrete. All the old hands knew about it, but no one had documented it, perhaps to avoid any awkward questions. So my friend had to reinstate the bug in the main program and add a patch to his own routine, and then everybody was happy. Such indeed are the devious ways of software!

Economy Tips

PC's recent spell in hospital led to a welcome cure of a complication following pleurisy, which fortunately turned out not to be bronchial carcinoma as at first diagnosed, but an empyema. My thanks for their good wishes for a speedy recovery to the Editor (in the editorial of the September issue) and to EK of Somerset, whose letter, full of interest, was forwarded by the magazine. (PC recognised his name at once, for he was at one time a frequent contributor to *Camm's Comic* and all the other popular electronics magazines, of which there were more in those days.)

One of the problems in hospital is how to occupy the inactive hours between meals. In PC's case, books of all sorts (including the *Ninth Daily Telegraph Crossword Puzzle Book*) and his Sony Walkman all played a part, as did writing last month's Stray Signals on his laptop. This was brought in for the purpose by his long-suffering wife, who had detailed instructions on how to charge it. The walkman was a great boon, as not only did it provide an almost endless supply of PC's favourite composers on cassette, but also masked the interminable nattering of the ward's *talkaholic*. But it did consume rather a lot of 'AA' size batteries which, as there was no facility for charging them, were primary cells rather than NiCds at 4·5V – its tape transport takes quite a bit of current.

Thus PC arrived home with a number of used 'AA' cells, which he had been loath to throw away, that Scottish streak again. On investigation it turned out that, whilst no longer capable of supplying the sort of current needed by the walkman for playing cassettes, their off-load voltage was not far short of 1·5V. So one was popped into a quartz clock of the sort with a conventional dial and hands, which is still working quite happily, being a low current drain application. Maybe even when too exhausted to run this, it might do in a quartz clock with LCD readout, where the current drain is even lower. So do not throw those old 'AA' cells away, they can power all your clocks. So can 'AAA' cells from a TV remote control, where the IR emitting diode(s) take a lot of current. You just have to add a conducting packing piece (a 4BA nut wrapped in aluminium cooking foil) to allow for their shorter length.

Yours sincerely,

Point Contact

The opinions expressed by the author are not necessarily those of the publisher or the editor.

3
PROJECT RATING

KIT AVAILABLE (90059) PRICE £49.99 B1

VIDEO LINE SELECTOR

Design by Ian Berry
Technical support by Chris Barlow
Text by Ian Berry and Maurice Hunt

Please find the screen display photographs 1 to 12 on page 32

This extremely useful project, which is ideal for television engineers and experimenters, enables the waveforms of individual lines of television video information signals to be viewed on a standard oscilloscope, allowing for the easy and rapid diagnosis of faults and/or adjustments, improvements and exploratory work to be undertaken – in short, this essential piece of test gear eliminates all the guesswork!

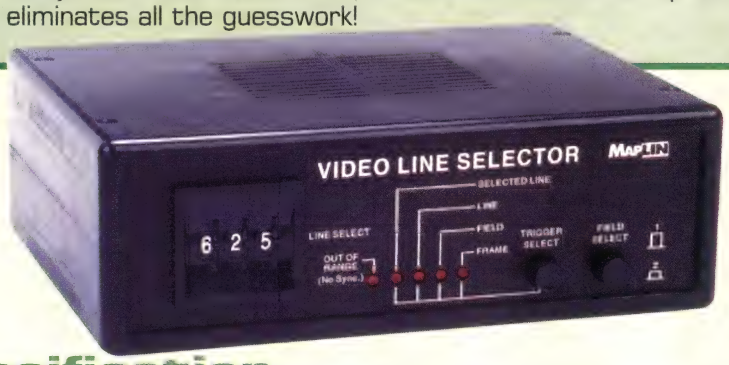

Specification

Operating voltage:	7·5 to 12V DC
Operating current:	≤ 75mA @ 12V
Video input impedance:	75Ω
Video output impedance:	75Ω
Main PCB dimensions:	153·8×120·6mm
Snap-off PCB dimensions:	37·5×36·2mm
External box dimensions:	175×130×58mm

When looking at video waveforms on an oscilloscope, even one with quite sophisticated line and frame trigger circuits, it is not possible to look at one single line out of the 625. The line trigger will superimpose all the 625 lines one on top of the other, giving a nice bright display which is fine for checking video level and such, but useless for seeing just one line out of the many. The frame trigger will display the lines one following another, however, the space between lines is so short that each single line still cannot be seen – Photos 1 and 2 illustrate this.

Clearly then, a device which will allow any single line out of the possible 625 to be displayed on the scope screen is going to be fairly useful. The idea would be to count lines as they go by, and at the one you want to look at, trigger the scope timebase. This is more or less how the Video Line Selector works, but as usual, things are not that simple. To begin with, if you just count positive-going synchronization (sync) pulse edges, you would end up with a

count of 642, not 625. To understand why this is so, it is necessary to look at a typical video waveform, particularly round the area of the vertical sync pulse. The basic television picture is made up of frames of information transmitted in a serial manner, one line at a time. In order to reduce bandwidth considerations and to reduce flicker, the frame is made up of two Fields. Each Field contains 312·5 lines.

Each Field has a period of 20ms (i.e. 50Hz), and it therefore follows that each frame (or complete picture) takes 40ms (i.e. 25Hz). It is no accident that 50Hz appears as the Field rate, as in the very early days of television, the 50Hz mains was used to synchronize the TV picture rate. The Field rate of 25Hz equates, of course, to 25 pictures per second, which is just higher than the 24 pictures per second of film. So, it all works out rather conveniently – that is, until you want to analyse what is going on. The two Fields are interlaced together to produce the single frame. The scan traces 312·5 lines down the screen from top to bottom, and then scans another 312·5 lines interlaced between the lines of the first scan For this trick to work, there must be an Odd number of lines, which is one reason why the line count is 625 – an odd number. A glance at Figure 1 should make this a little clearer, while Photo 3 shows half a line of video information at line 623.

All this means that the vertical sync pulse is not as simple as it would appear, because of course, the TV set has to know which Field it is currently scanning – Field one (Even) or Field two (Odd).

In the early days of television, it was not uncommon for the sync separator to be unsure of which Field was which, and this gave rise to a fault where the TV set scanned both Fields in the same place, i.e. on top of each other. Incidentally, this two Field arrangement accounts for the picture judder sometimes seen on VHS still frames as the player tries to put Fields in the wrong place. It also accounts for why very sophisticated (read expensive!) video recording machines with complicated timebase correctors and bendable video heads are required to give a broadcast quality still frame or slow motion replay. The theory of how the TV set can scan the lines in correct interlace lies in the rather strange number of lines in each Field – 312·5. Figure 2 shows how this gives rise to a half line offset between Fields 1 and 2, thus giving the correct interlace. The need for a half line is one reason why the vertical sync pulse and the vertical blanking interval is so complicated. The blanking interval is the period between the end of one active picture and the beginning of the next. This is the picture that you actually watch, and not the other signals to be found hereabouts (more on this later). The actual sync pulse consists of 5 half line period equalising pulses, followed by 5 inverted half line period broad pulses, followed in turn, by 5 more equalising pulses. These half line period pulses are the reason why a simple line counter would count to 642 and not 625. Photo 4 depicts the complete Field sync and blanking pulses, and Photo 5 shows the Field sync pulse.

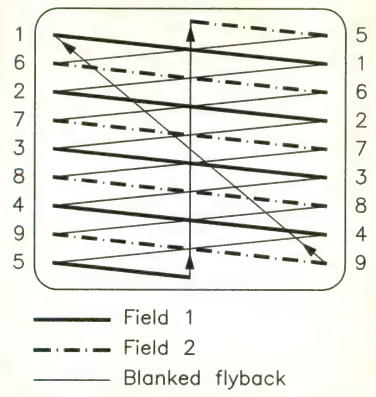

Figure 1. Simplified interlaced picture, with only 9 lines.

Although all this sounds a bit daunting, the sync separator part of the Line Selector consists of one 8-pin chip and five passive components – the wonders of modern technology! Mind you, if you think this is complicated, take a look at the theory behind the PAL colour TV system, where there are not just two Fields but four, and if you take into account the phase of the colour burst, the same configuration does not repeat for 8 Fields. This used to cause major headaches in the days when video recording was done in PAL, since editing was seriously difficult due to this 8 Field sequence. Thankfully, these days, most recording is done in component (RGB or YUV) form, and the colour part can usually be

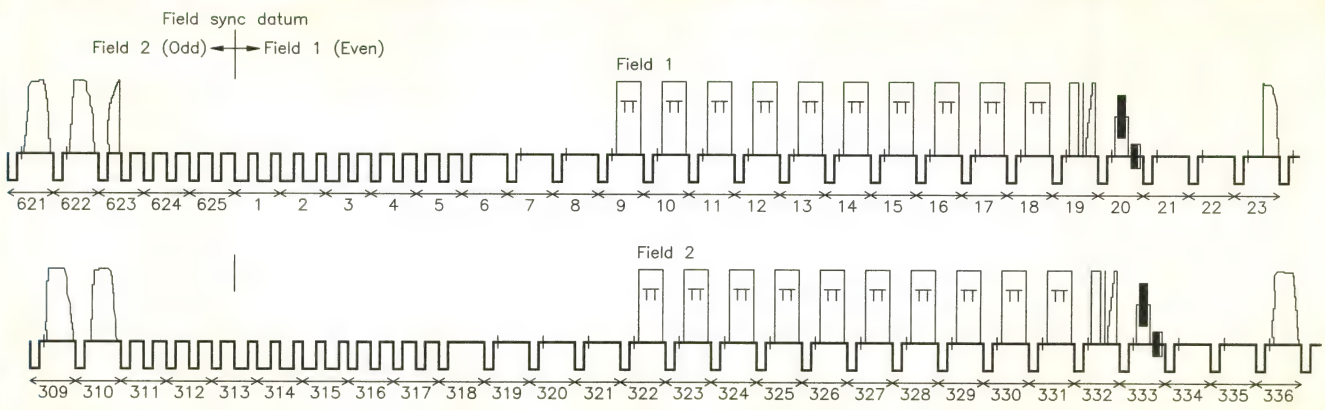

Figure 2. Vertical interval, showing the relationship between Fields 1 and 2.

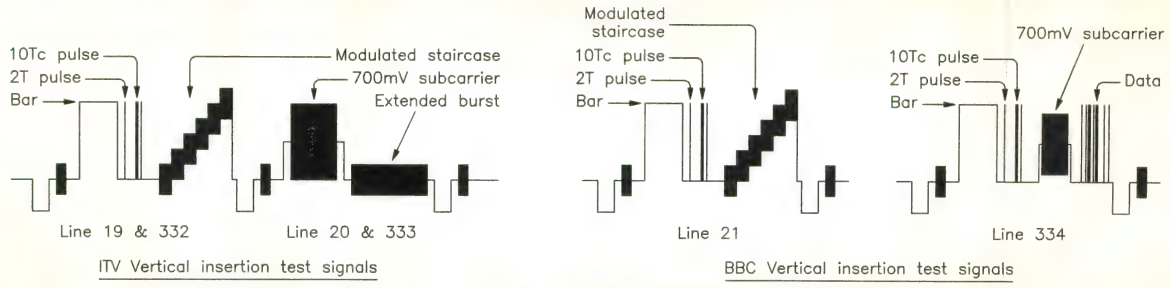

Figure 3. Drawings of vertical interval test signals (typical BBC and ITV vertical interval test signals – VITs).

neglected. For the purposes of selecting individual lines, the colour part is irrelevant also, and a simple Odd/Even sequence is all that is required to be separated.

One very useful use of a line selector, is to take a look at the information transmitted in the vertical interval of just about every off-air or satellite channel you can pick up. Figure 2 includes a couple of examples of these. In each Field, there are nine or ten lines containing Teletext information; if your TV set is a bit lacking in height, you can see this as little blocks jumping around at the very top of the screen. There is not much you can do with Teletext information on the scope, apart from look at its amplitude. Analysing Teletext requires special test equipment of its own. The best way to see if it is working correctly, is to call it up on a Teletext-equipped TV set. One thing you can do is to see if Teletext is being transmitted, as the lines of data will appear to change as the different pages are received. Of rather more interest, are the vertical interval test signals (VITS). See Photo 6, which shows Text and VITS information, and Photo 7, of the top of a TV screen, showing Text and VITS signals, etc.) VITs occupy the lines immediately after the Teletext, and may be one or two lines long, depending on who is transmitting them – see Figure 3. Their actual use is for the transmitter engineers to keep a check on performance, as a

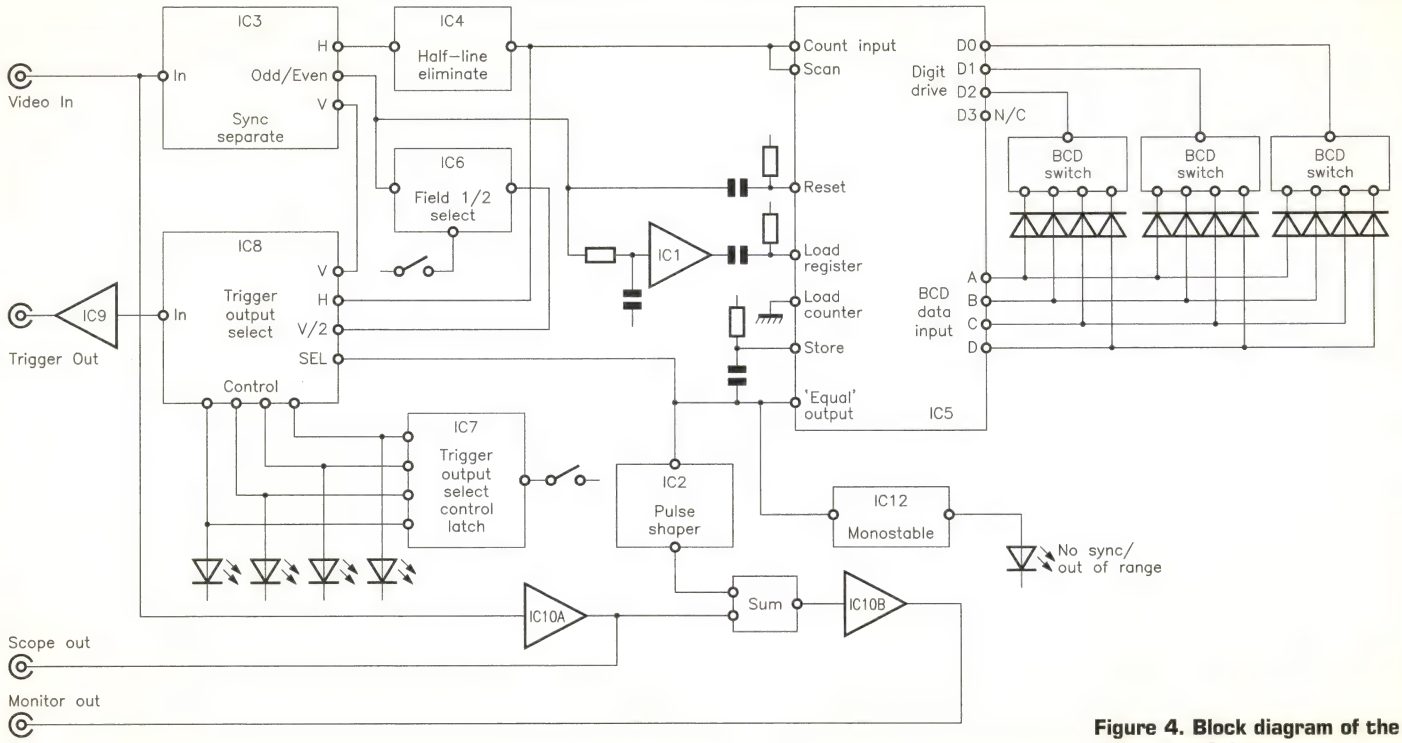

Figure 4. Block diagram of the Video Line Selector.

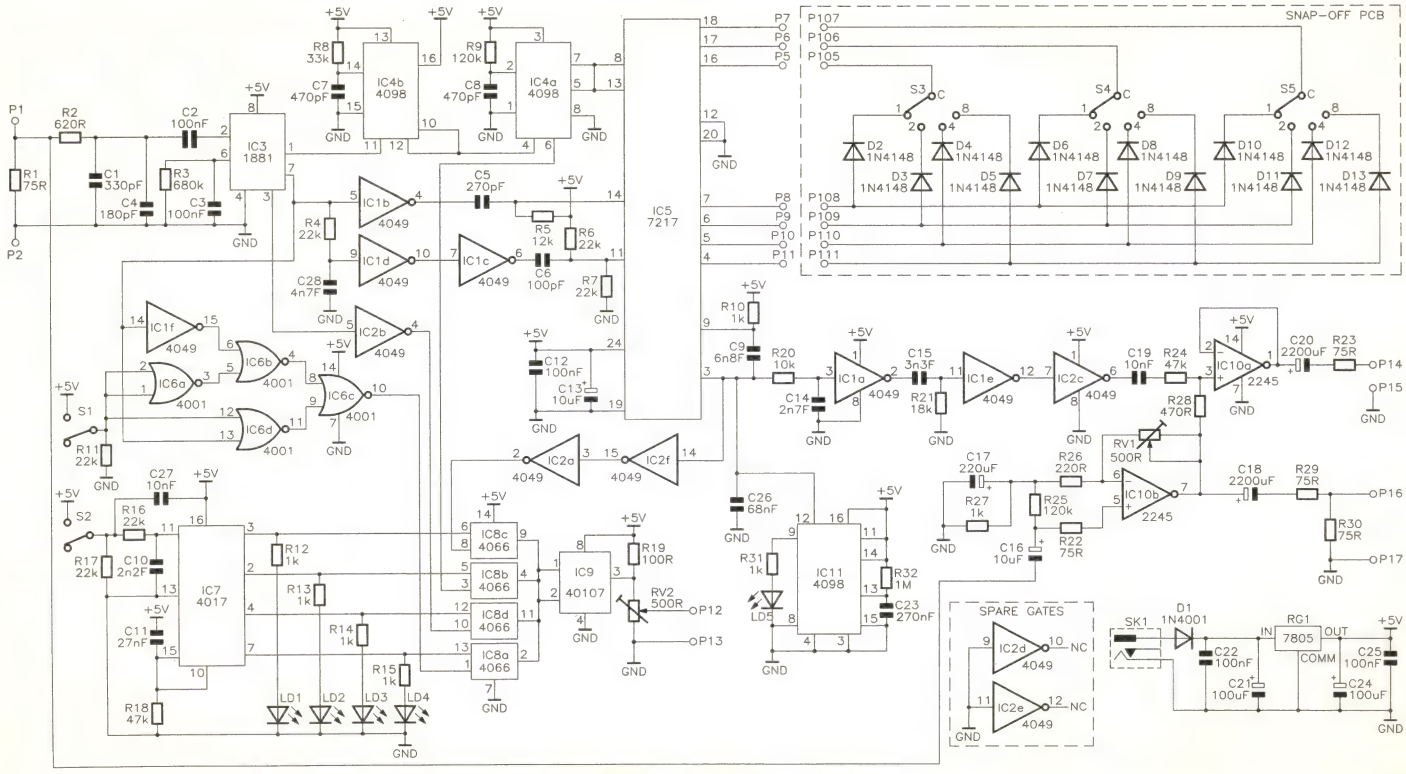

Figure 5. Circuit Diagram of the Video Line Selector.

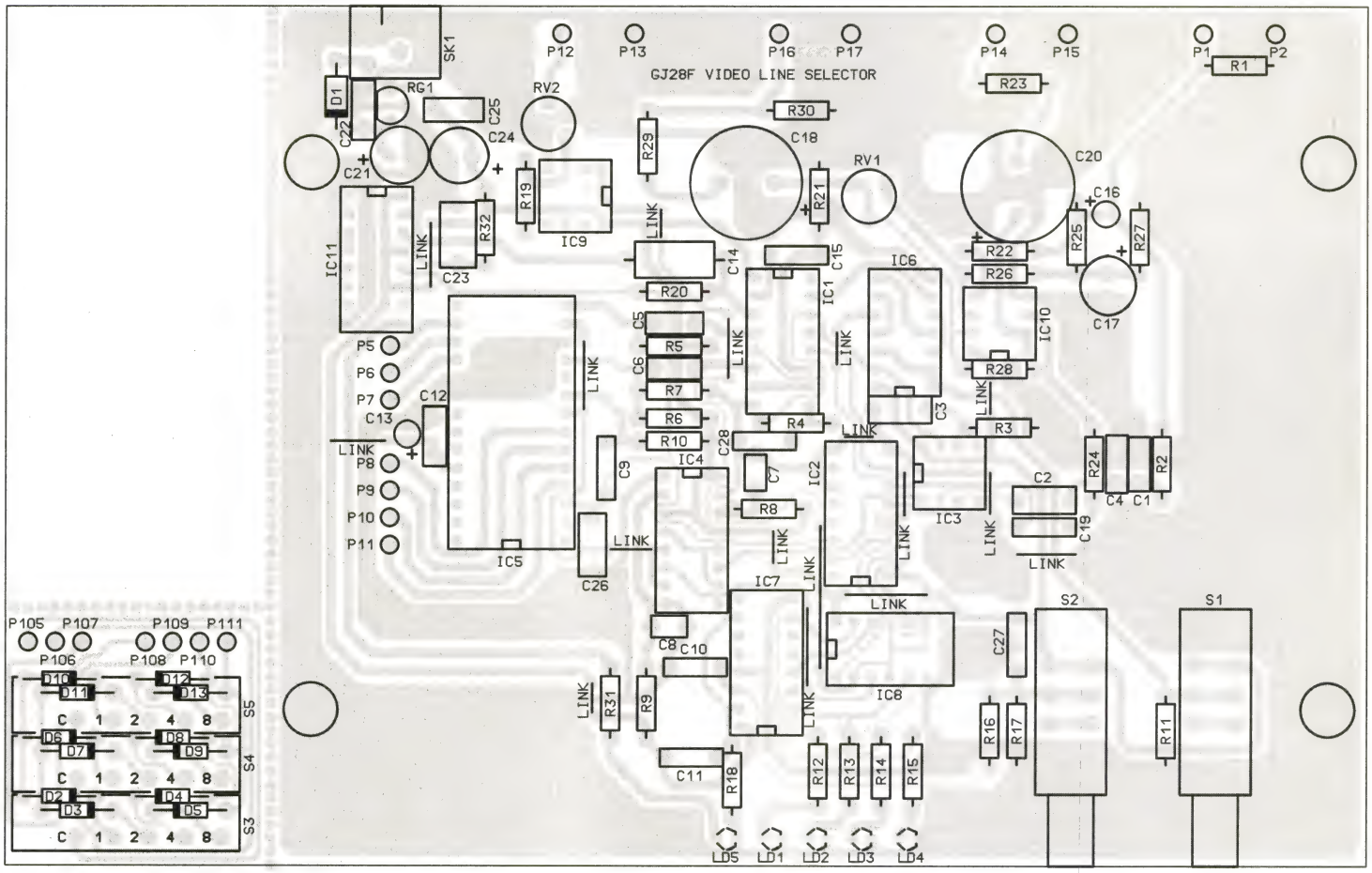

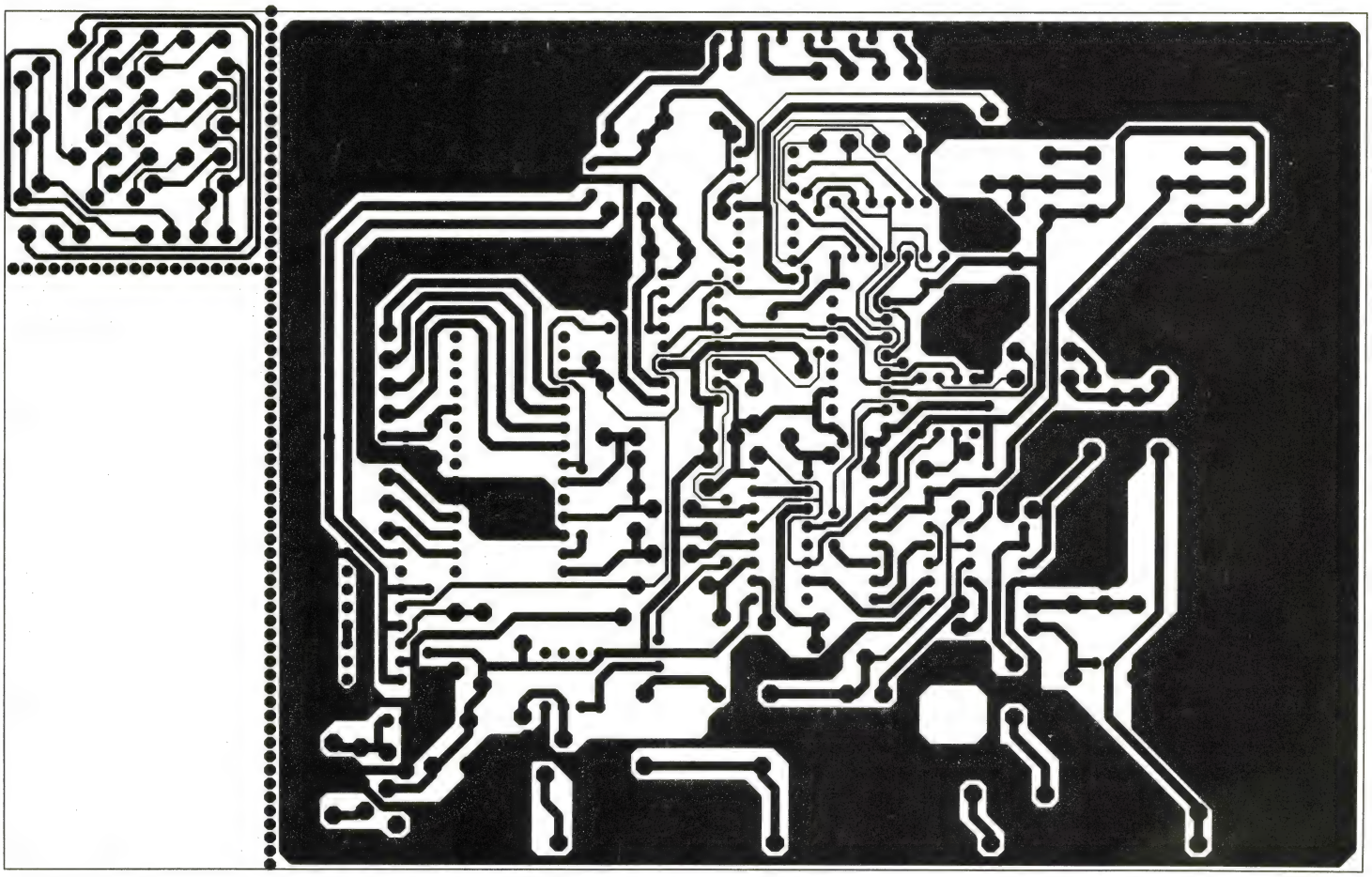

Figure 6. PCB legend and track.

television picture is not much good as a test waveform, and in these days of 24-hour broadcasting, the old Test Card F is no longer seen. This can be used as a good guide to the operation of the receiving and decoding circuits in your TV or VCR, as they give a peak white indication for level setting, and a colour section to check decoders. They also give other information of more use to lines and transmitter engineers, to check such things as equalisation, group delay and so on. Photos 8 and 9 show the VITS transmitted by BBC2 during the Sheffield Snooker Tournament, in April 1995. Photo 8 is of Field 1, and contains on the first line, a full amplitude white bar, a 2T pulse, a 20T modulated pulse, a 50% level with colour burst, and a data packet. The second line of Field 1 is a time domain sinX/X test signal. Photo 9 depicts Field 2, and has the same pulse and bar as Field 1, followed by a modulated 5-step staircase. The second line is a luminance linearity ramp. It will be noted that the photographs do not, in fact, quite match the drawings of Figure 3. There are no hard and fast rules as to just which combination of test signals are used.The photographs are from an outside broadcast transmitted on BBC2, and the test signals shown may well be originated at the remote site, in this case, the Crucible Theatre in Sheffield. If you look at a satellite channel output, you will also find extra lines of what appear to be Teletext within the vertical interval. This is the data required by the Smartcard to decode the encrypted video signal.

Circuit Description

Refer to Figures 4 and 5, showing the block and circuit diagrams, respectively. The Video Input is terminated with a 75Ω resistor, and is input to IC3,the sync separator. Here, the picture information is stripped off the waveform, and the sync information is separated into three components. The H signal is sync without the picture, however, it contains all the sync pulses, including the half line pulses in the vertical sync portion of the waveform. The V signal is a pulse which occurs at the vertical sync period of each Field. Note there are two of these in each frame period. The sync separator also indicates which Field is odd and which is even. The odd/even output is a Field rate square wave, which is high for Field 1 and low for Field 2. In order that the line counter will count to 625 and not 642, the half line information is removed from the H signal by IC4b. This is a monostable multivibrator, with a period equal to the duration of about $^3/_4$ line. Because it is not retriggerable, it will ignore the half line equalising and broad pulses in the vertical sync. IC4a retimes the resulting pulses to approximately the original width. There are now only 625 line pulses out of IC4. The output from IC4 goes to the count input of IC5 and also to IC8, to be selected as a possible trigger output. IC5 is a four-digit counter with presettable register inputs. It will also directly drive 7-segment displays, but this function is not required in this instance. It contains two digitalcomparators, one of which indicates when the counter is at zero and the other, which is the one used in this application, indicates when the count input is equal to a value set into a register by means of the thumbwheel switches S3 to S5. The counter is set to zero at the start of each frame, and counts H pulses until the figure set into the register is reached, whereupon the counter is stopped and a pulse is sent out to the trigger output, to tell the scope that this is the line required. As the counter is only required to count UP, the up/down control pin is left floating and is pulled up internally. The H pulses from IC4 are input to the count input of IC5, and also the scan input. This last will override any internal clocks within the chip and synchronize it with the TV waveform.

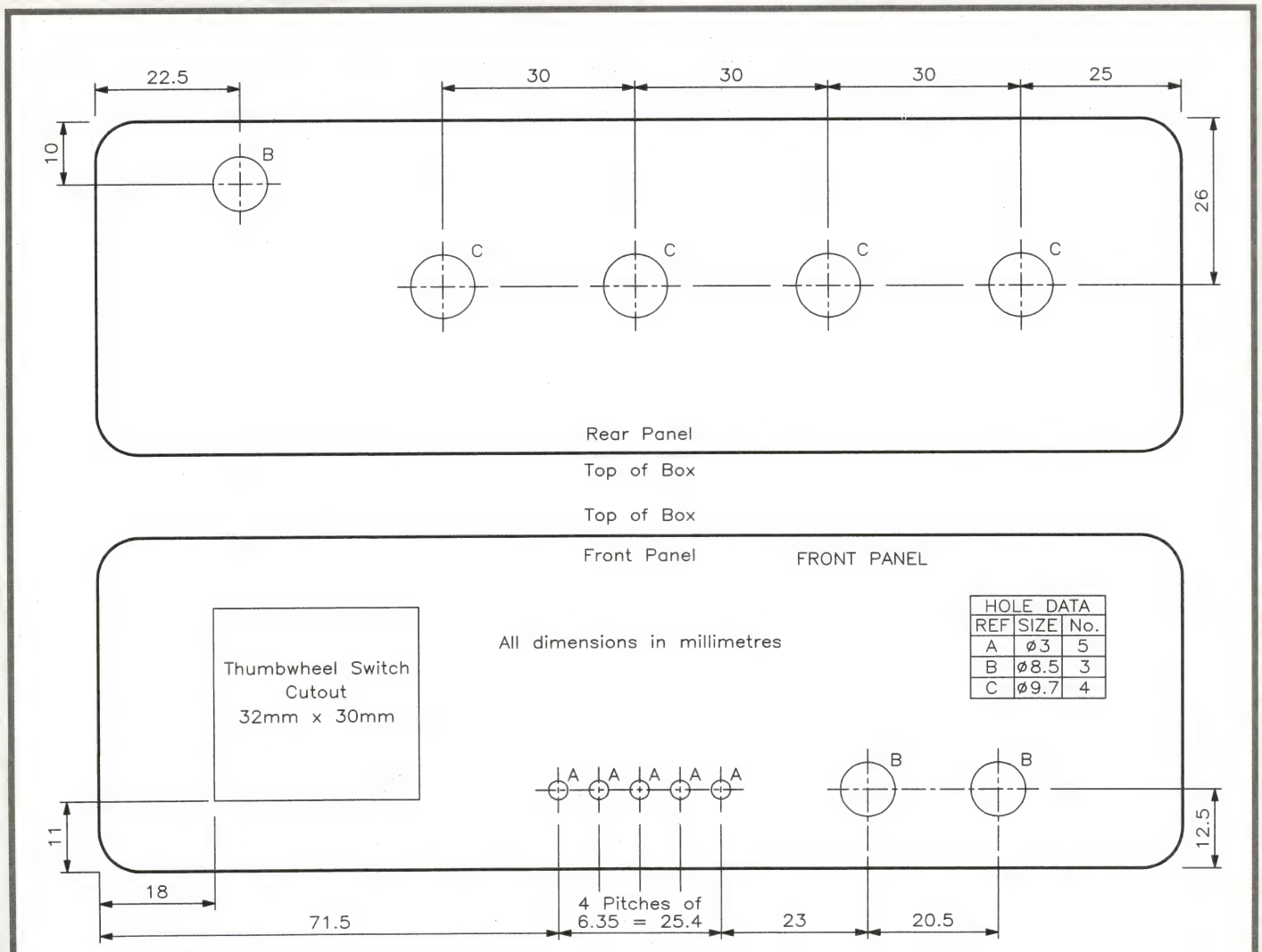

Figure 7. Box drilling details.

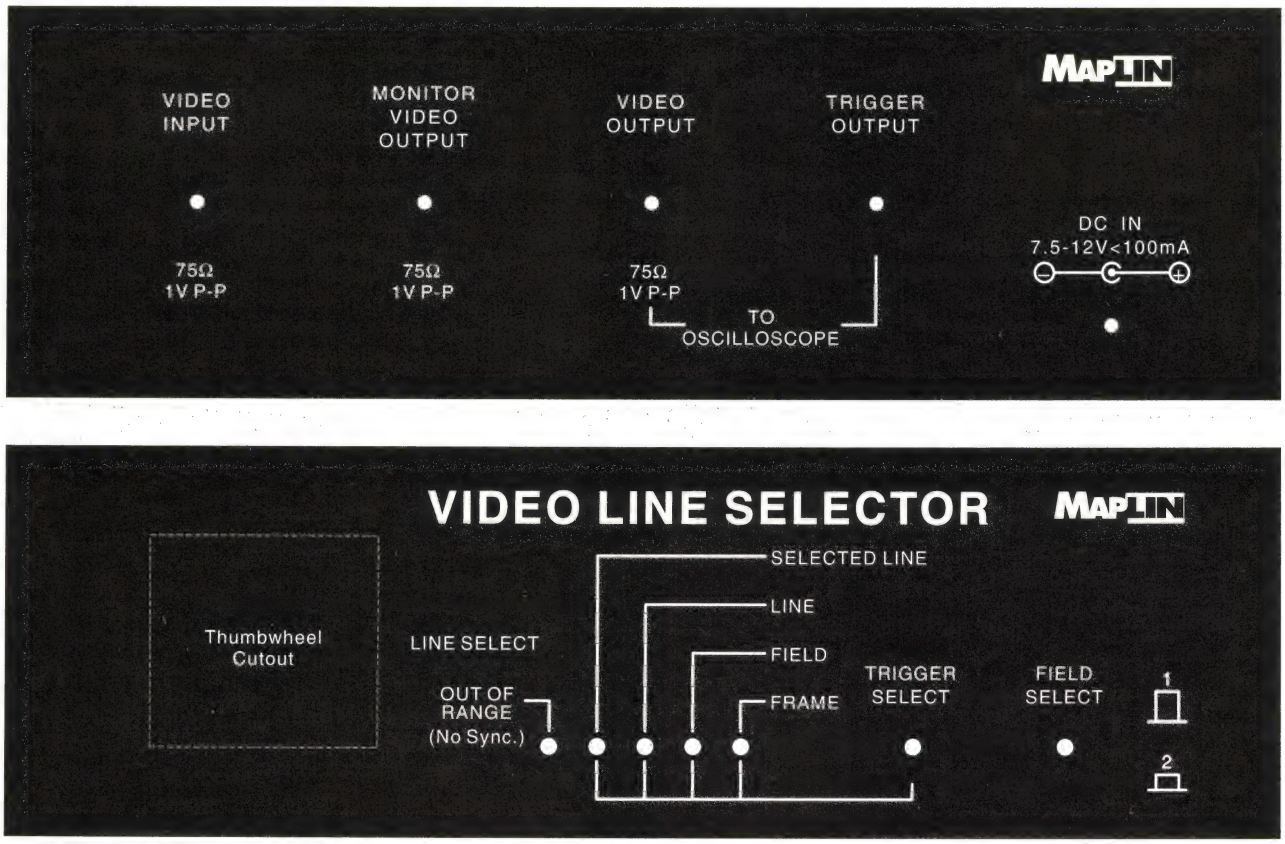

Figure 8. Front and rear Video Line Selector Labels.

This gives a cleaner digit setting. The facility to load the thumbwheel data into the counter section as a starting point is not required, and so pin 12, load counter, is held at ground.

The Odd/Even square wave from IC3 is passed to a polarity selection circuit formed by IC1f and IC6. The Field 1/Field 2 switch S1, controls the polarity of the square wave output from IC6c. When the switch is in the out position, the square wave is passed through unchanged, but when the switch is pressed in, the square wave output is inverted. This inverted or not inverted square wave is used as the Frame Trigger output, when selected by IC8. The rising edge of the square wave from IC3 indicates the start of Field 1 so if this is passed to IC8 unchanged the scope will trigger at the start of Field 1. However, if the square wave is inverted before passing to IC8 the scope will trigger at the start of Field 2. The reason for this will be explained in the section Using the Unit.

The Odd/Even square wave from IC3 is inverted by IC1b, and then differentiated to a short pulse by C5 and R5. This is used to set the IC5 counters to zero at the start of each frame. The same squarewave is delayed slightly by IC1d and IC1c and their associated components, and is used to set the number on the thumbwheel switches into the comparison register. Because the load register input to IC5 is also used to shut down the entire chip when taken to ground, R6 and R7 ensure that the normal state of this input is 2·5V or so, and the load pulse drives it positive from this point. The data inputs to IC5 are multiplexed from the digit drive outputs normally used to operate 7-segment displays. The three outputs on pins 18, 17 and 16 or D1, D2, and D3 are used to select respectively Units, Tens and Hundreds. The thumbwheel switches are of the BCD style, switches being ON for active. Pin 15 or D4 is not used, as a count to 625 only is required. A diode matrix D2 to D13 is used to prevent the data reaching the wrong BCD input. So, the sequence is: reset the

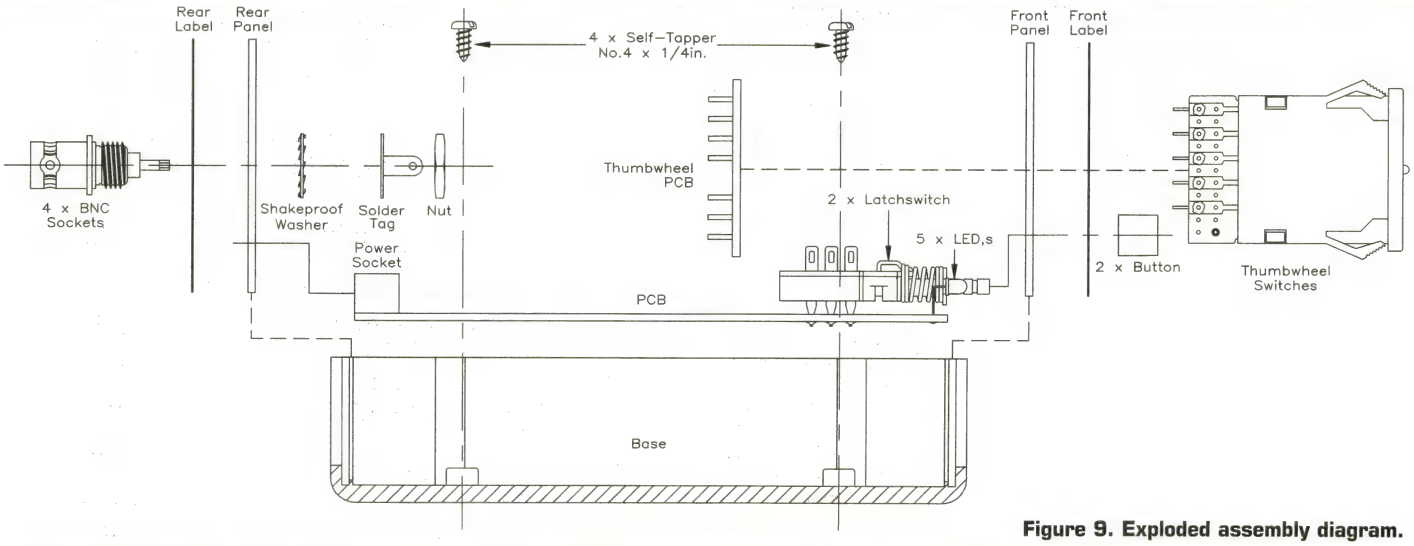

Figure 9. Exploded assembly diagram.

counters; load the line number required on the switches; count line pulses until the required number. At this last point, the equal output goes low for one line period. This pulse is buffered and used to trigger the scope. It is also used to drive the store input of IC5, which effectively stops the count. Everything then waits for the start of the next frame before beginning all over again with another reset pulse. Before leaving IC5, it is worth a note that there are two versions of the ICM7217. These are NOT interchangeable, having different pin-outs. The version sold by Maplin is the ICM7217A1P1, which is different to the ICM7217IJI sold by, among others, a certain large supply company near Northampton. So, people buying just the PCB or going it alone, please be warned. The trigger output to the scope is selected by IC8, which is a quad analogue switch. The control inputs are driven by IC7, a simple decoded decade counter, controlled by a single push-button. The button will step the counter through four possible outputs, the fifth being used to reset the counter to zero. The four possible outputs are indicated by low-current LEDs connected directly to the outputs of the counter.

The four inputs to IC8 and hence, the trigger output, are H pulses (giving a normal superimposed line rate display – see Photo1), Vpulses (these are Field rate pulses – see Photo 2), V/2 pulses (actually the odd/even square wave at frame rate), and a delayed line pulse produced by pin 3 of IC5, which will trigger the scope at the selected line time (most of the other Photos). The output of IC8 is fed out to the oscilloscope by an open drain driver, IC9. This form of driver gives a measure of protection against a short circuit connecting cable, while still providing a good DC coupled rise-time. A 500Ω potentiometer, RV1, is added after the driver, which serves to tailor the trigger pulse output to the input of the scope. The equal output from IC5 is also taken to a pulse shaping circuit, which reduces its width to just less than one active line.

Video from the input pin P1 is buffered by IC10b, and taken to a separate output P16 to drive the scope vertical input. RV1 sets the output level at the scope output to match the level at the input of the line selector. This output is attenuated by the two 75Ω resistors R29 and R30, so that the scope input need not be terminated, but will still show the correct level (if the scope input is terminated, omit R30). This output is also summed with the shortened line pulse from the pulse shaping circuit and output to a monitor by the driver IC10a. This produces a bright line on the picture at the position of the line selected, provided that line is within the active picture area. The two outputs for the scope and monitor need to be separated in this way, as the bright line would affect the waveform displayed on the scope (See Photos 10a to 12b). As it will be possible for the thumbwheel switches to be set to a line number higher than 625, IC11b is used to indicate an 'out of range' condition.

If the thumbwheels are set above 625, the count input will never reach the register figure, as the counters will be reset first. Thus, an equal pulse will never be generated. IC11b is a monostable with a period of just over one frame, more than 40ms, (the equal pulse occurs every frame). This monostable is designed to be retriggered by every equal pulse. Thus, provided the equal pulse is being generated, the monostable output will not change state, and the LED LD5 on its output will not light. The equal pulse will also not be present if there is no video input to the unit, so the LED will also indicate a no video condition. Power for the unit can be anything between 7·5 and 12V, as RG1 regulates this down to 5V. There is a diode (D1) fitted to protect against reverse polarity.

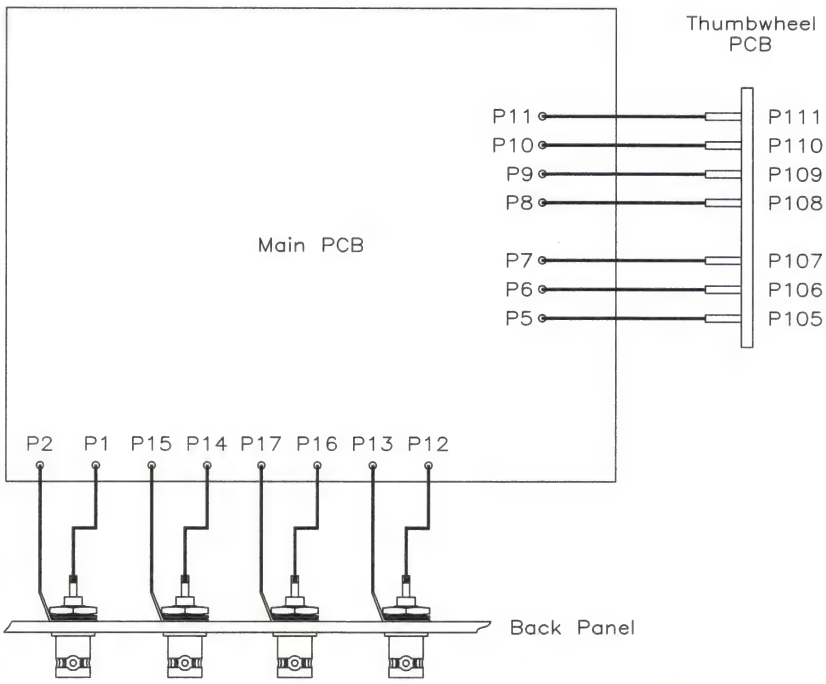

Figure 10. Wiring diagram for the Video Line Selector.

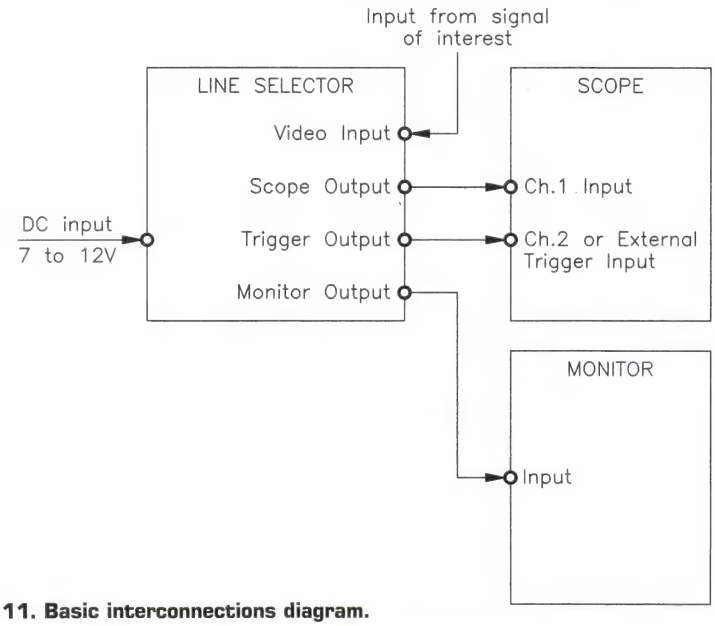

Figure 11. Basic interconnections diagram.

PCB Construction

Reference to Figure 6, which shows the PCB legend and track, will be of assistance when assembling the board. The recommended order of construction is to start with the smallest components and work up in size to the largest. Ensure that all polarity conscious components, such as the diodes, electrolytic capacitors, and semiconductors are orientated correctly in accordance with the PCB legend. Similarly, install the IC sockets the correct way round, with the notch

aligning with that printed on the board. The ICs should be plugged into their sockets last of all, taking the necessary antistatic precautions, since the majority in this project are CMOS devices. Thoroughly check the completed PCB for any erroneous component placement, solder bridges, whiskers and dry joints, and finally, clean excess flux residue off the board using a suitable solvent.

Box Construction

The Video Line Selector PCB is designed to fit into the Optional plastic instrument case type KC61R. Follow the drilling guide depicted in Figure 7. The front and rear panel labels shown in Figure 8 can be used as a template, after first separating the two labels. With the holes drilled in both panels, clean up any plastic swarf and position the labels on the panels. Using a scapel or sharp knife, cut the holes for the connectors and switches. The exploded assembly diagram is given in Figure 9, showing how the PCB is fitted into the casing.

Setting-up

Refer to the wiring diagram for this unit, which is given in Figure 10. Setting-up only requires that the scope output accurately reflects the value of the input to the unit. This is set with RV1. Since this is not necessarily an absolute level setting, the easiest way to do this is to display the input video on scope channel A and the Video Line Selector scope output on channel B (assuming you have a twin-trace oscilloscope). Superimpose the two waveforms using the vertical shift controls, then set RV1 until the two waveforms match exactly.

Using the Unit

Basic connections to the Video Line Selector are shown in Figure 11. The trigger output may, of course, be taken to a second vertical input of a dual beam scope, rather than the external trigger. This will allow a direct time comparison between trigger pulse and video waveform. Some of the photographs show more than one line at once – this is still done with the Video Line Selector. In this case, the first line at the left-hand side of the scope display is the line selected. Increasing or decreasing the timebase speed of the scope will display more, or less lines as required, the selected line always being the left-hand starting point. The other three trigger output positions are simply used to provide a stable source of trigger pulses for the scope when observing the more usual waveforms at line rate or frame rate. The line output will give a display of all the TV lines superimposed on top of each other, as per Photo 1. The Field output will give a display of Field one superimposed over Field two, with the scope set to show one TV Field. The frame output will give a display of Field one, followed by Field two if the scope is set to display two TV Fields – see

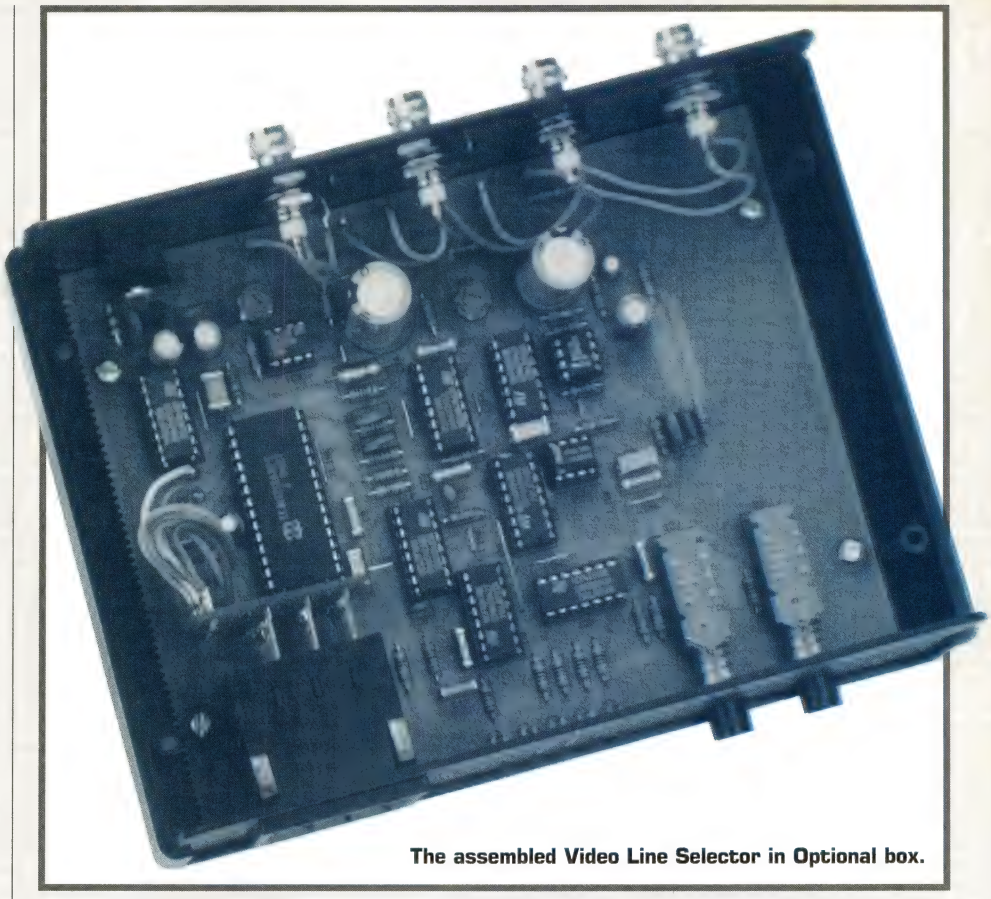

The assembled Video Line Selector in Optional box.

Photo 2. If the Field selector switch is set to Field 2 then this display will be Field 2 followed by Field 1. This last function is useful if the Vertical Interval is the item of interest within the display. With the switch set to Field 1 the Vertical Interval displayed in the centre of the scan is Field 1 to Field 2 transition. The Field 2 to Field 1 transition is displayed with half at the start of the scan and the other half at the end of the scan. Thus the complete interval cannot be seen as a single unit. Pressing the switch to the Field 2 position will reverse the positions of the Vertical Intervals. Now the Field 2 to Field 1 transition is in the centre of the scan and can be seen in its entirety. If the oscilloscope timebase is set to display one Field of signal and triggered from the Frame Trigger output then the Field 1/Field 2 switch will select either Field 1 on the display or Field 2.

This type of unit is useful in all sorts of odd situations. It can be used to check the white balance of a remote camera by moving the white line over an area known to be neutral white, observing the resultant line on the scope and setting the remote camera controls for minimum chroma (or best white balance). It will probably not escape the notice of some eagle-eyed readers, that the scope used for photos 1 to 9 is not the same as that used for photos 10 to 12, an explanation for which is provided below!

The first set were done under workshop conditions at home, but the second lot of monitor pictures and associated waveforms were done on an actual television outside broadcast, where a line selector is used for just such an application. It may be found that although off-air pictures look somewhat degraded, they will give good results in the Video Line Selector. However, the same may not be true of a picture played back from a VHS recorder, which may look great on the monitor, but which will cause the Video Line Selector to jitter and generally drop out of lock. VHS recorder outputs are notoriously unstable on the horizontal axis. Indeed, when they and their forerunner, the Philips cassette machine (remember the 1500 series?) first came out, most TV sets required modification to successfully display their picture. Then there were the sets with a switch to set for VCR playback or a special input, which you had to use or the picture wandered about all over the place. Thankfully, TV sets these days are much more tolerant of such things, but you may experience a little trouble with the Video Line Selector.

One other problem you might encounter, is a lack of screen brightness when displaying only one line. The Video Line Selector is effectively displaying one line out of 625. The actual display is expanded by 625 times (a more normal expansion figure is ×10). This means that if the single line occupies a horizontal display area of 10cm, then the entire waveform would be 625 times this, or 6·25m long! Hence, your display is going to be pretty dim unless you use a good quality scope with lots of vertical bandwidth and a high final acceleration voltage (over 50MHz and at least 12kV, respectively). The Goldstar OS-9060D sold by Maplin (DK26D) ought to be suitable. The Goldstar OS-9100D (GW05F) would be more than adequate.

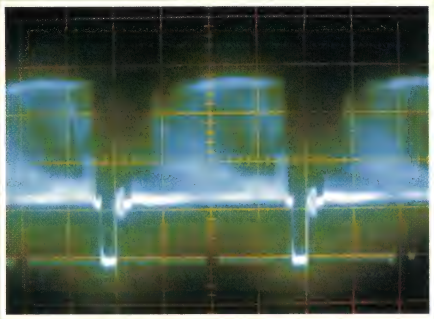

Photo 1. Line display produced by triggering scope with 'Line' output.

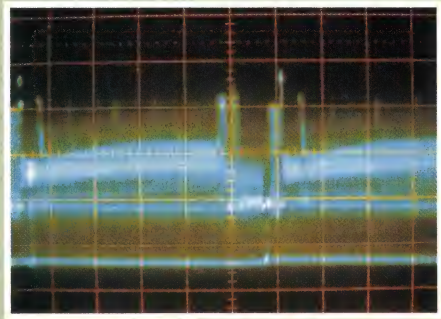

Photo 2. Frame display produced by triggering scope with 'Field' output.

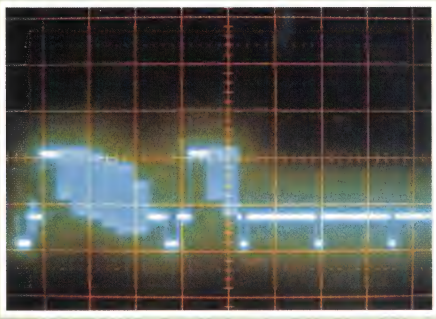

Photo 3. End of Field 2, showing half a line of video at line 623.

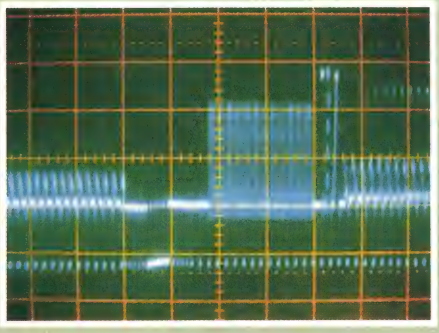

Photo 4. The complete Field sync and blanking pulses.

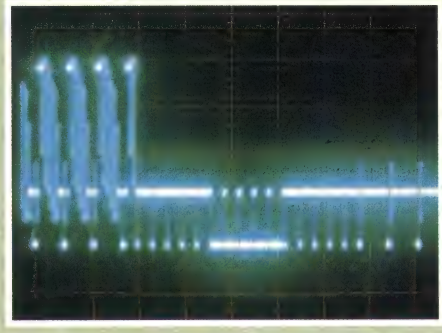

Photo 5. The field sync signal shown on a different range.

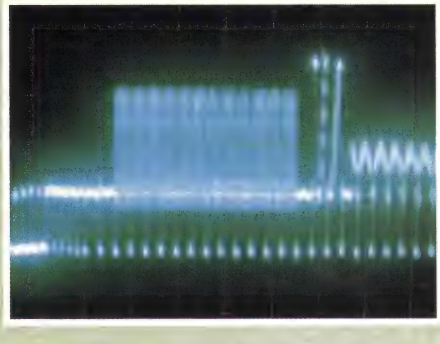

Photo 6. Teletext and VITS in the vertical blanking.

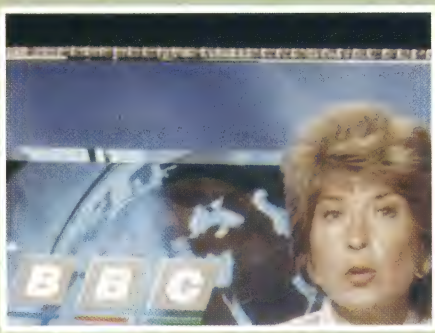

Photo 7. Teletext and VITS at the top of a picture.

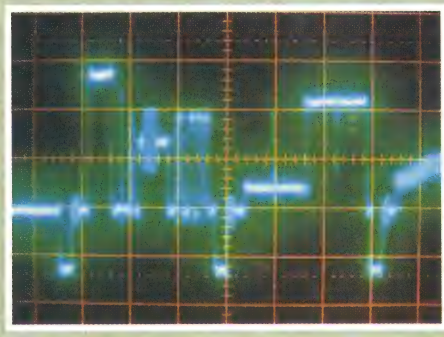

Photo 8. Vertical interval test signals in Field 1.

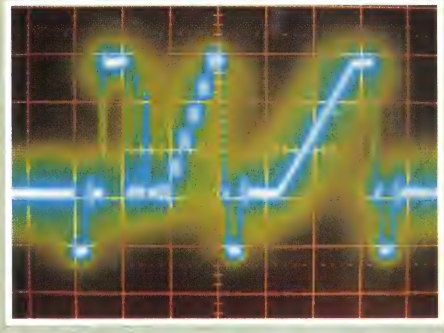

Photo 9. Vertical interval test signals in Field 2.

Photo 10a. Monitor screen picture with cursor line.

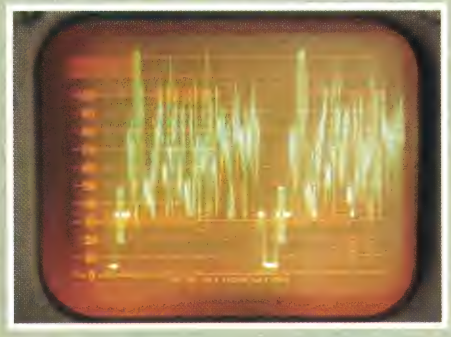

Photo 10b. Waveform of the line selected in Photo 10a.

Photo 11a. Monitor screen picture with cursor line.

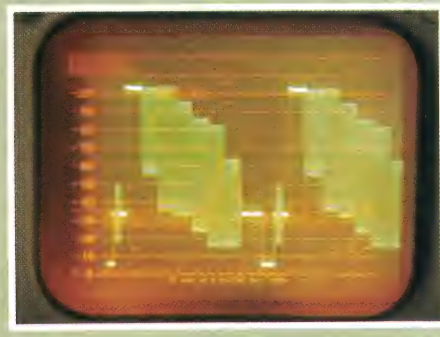

Photo 11b. Waveform of the line selected in Photo 11a.

Photo 12a. Monitor screen picture with cursor line.

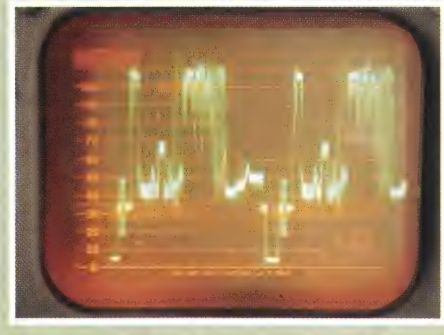

Photo 12b. Waveform of the line selected in Photo 12a.

VIDEO LINE SELECTOR PARTS LIST

RESISTORS: All 0·6W 1% Metal Film (Unless Specified)

R1,22,23, 29,30	75Ω	5	(M75R)
R2	620Ω	1	(M620R)
R3	680Ω	1	(M680R)
R4,6,7,11, 16,17	22k	6	(M22K)
R5	12k	1	(M12K)
R8	33k	1	(M33K)
R9,25	120k	2	(M120K)
R10,12-15, 27,31	1k	7	(M1K)
R18,24	47k	2	(M47K)
R19	100Ω	1	(M100R)
R20	10k	1	(M10K)
R21	18k	1	(M18K)
R26	220Ω	1	(M220R)
R28	470Ω	1	(M470R)
R32	1M	1	(M1M)
RV1,2	500Ω Cermet Preset Potentiometer	2	(WR39N)

CAPACITORS

C1	330pF Ceramic Disc	1	(WX62S)
C2,3	100nF Polyester Layer	2	(WW41U)
C4	180pF Ceramic Disc	1	(WX59P)
C5	270pF Ceramic Disc	1	(WX61R)
C6	100pF Ceramic Disc	1	(WX56L)
C7,8	470pF Ceramic Disc	2	(WX64U)
C9	6n8F Polyester Layer	1	(WW27E)
C10	2n2F Polyester Layer	1	(WW24B)
C11	27nF Polyester Layer	1	(WW34M)
C12,25	100nF 16V Ceramic Disc	2	(YR75S)
C13,16	10μF 16V Radial Electrolytic	2	(YY34M)
C14	2n7F 1% Tolerance Polystyrene	1	(BX61R)
C15	3n3F Polyester Layer	1	(WW25C)
C17	220μF 10V Radial Electrolytic	1	(JL06G)
C18,20	2200μF 16V Radial Electrolytic	2	(FF60Q)
C19,27	10nF Polyester Layer	2	(WW29G)
C21	100μF 25V Radial Electrolytic	1	(FF11M)
C22	100nF 50V Ceramic Disc	1	(BX03D)
C23	270nF Polyester Layer	1	(WW46A)
C24	100μF 16V Radial Electrolytic	1	(RA55K)
C26	68nF Polyester Layer	1	(WW39N)
C28	4n7F Polyester Layer	1	(WW26D)

SEMICONDUCTORS

D1	1N4001	1	(QL73Q)
D2-13	1N4148	12	(QL80B)
LD1-5	3mm Low Current Red LED	5	(CZ28F)
RG1	LM78L05ACZ	1	(QL26D)
IC1,2	HCF4049UBEY	2	(QX21X)
IC3	LM1881N	1	(UL75S)
IC4,11	HCF4098BEY	2	(QX29G)
IC5	ICM7217AIPI	1	(CP95D)
IC6	HCF4001BEY	1	(QX01B)
IC7	HCF4017BEY	1	(QX09K)
IC8	HCF4066BEY	1	(QX23A)
IC9	HCF40107BEY	1	(QW65V)
IC10	EL2245CN	1	(AJ58N)

MISCELLANEOUS

S1,2	2-pole Latchswitch	2	(FH67X)
S3-5	BCD Thumbwheel Switch	3	(JK36P)
SK1	2·5mm PCB Mounting DC Power Socket	1	(FK06G)
	Round Latchswitch Button Black	2	(FL31J)
	Single-ended PCB Pins 1mm	1 Pkt	(FL24B)
	8-pin DIL Socket	3	(BL17T)
	14-pin DIL Socket	2	(BL18U)
	16-pin DIL Socket	3	(BL19V)
	28-pin DIL Socket	1	(BL21X)
	Thumbwheel Switch End Cheeks	1	(JK37S)
	Front & Rear Panel Label	1	(90068)
	PCB	1	(90060)
	Instruction Leaflet	1	(XV74R)
	Constructors' Guide	1	(XH79L)

OPTIONAL (Not in Kit)

	BNC Round Chassis Socket 75Ω Impedance	4	(FE31J)
	Plastic Instrument Case	1	(KC61R)
	AC Adaptor Regulated	1	(YB23A)
	No. 4¼in. Self-tapping Screws	1 Pkt	(FE68Y)
	Large Stick-on Feet	1 Pkt	(FW38R)

The Maplin 'Get-You-Working' Service is available for this project, see Constructors' Guide or current Maplin Catalogue for details.

The above items (excluding Optional) are available as a kit, which offers a saving over buying the parts separately.

Order As 90059 (Video Line Selector) Price £49.99 B1

Please Note: Where 'package' quantities are stated in the Parts List (e.g., packet, strip, reel, etc.), the exact quantity required to build the project will be supplied in the kit.

The following new items (which are included in the kit) are also available separately, but are not shown in the 1996 Maplin Catalogue

Video Line Selector PCB **Order As 90060 Price £7.49**

Video Line Selector Front & Rear Panel Label **Order As 90068 Price £2.49**

ATTENTION!...ATTENTION!...ATTENTION!...ATTENTION!

IMPORTANT NEWS FOR OVERSEAS READERS!

Obtaining components and kits for the projects featured in *Electronics* is now easier than ever in the following countries and regions:

Channel Islands
C.I. Components Ltd.,
Crossways Centre,
Bray Road,
Vale, Guernsey.
Tel: 01481 44177
Fax: 01481 42291

Middle Eastern Region
Saudi Arabia
(Alkhobar Region)
Fadan Establishment,
P.O. Box 848
Alkhobar 31952
Kingdom of Saudi Arabia
Tel: 3 898 2737
Fax: 3 898 2737

United Arab Emirates (U.A.E), Bahrain, Kuwait, Oman, Qatar
Maplin Middle East Company,
P.O. Box 47019,
Hamdan Street,
Abu Dhabi, U.A.E.
Tel: (971) 02 760332
Fax: (971) 02 760317

Lebanon
N and Y Controls,
P.O. Box 175414,
Beirut, Lebanon.
Tel: (01) 443091/397467
UK Office:
Tel: (44) 1702 347614
Fax: (44) 1702 77161

African Continent
South Africa, Namibia, Botswana, Lesotho, Swaziland, Mozambique, Angola, Zimbabwe
Maplin South Africa (Pty) Ltd.,
P.O. Box 1846,
Somerset West, 7129
Republic of South Africa.
Tel: (024) 51 51 24
Fax: (024) 51 51 27

Mediterranean
Malta
Cam Services,
Cam Centre,
Off Canon Road,
Qormi,QRM 09, Malta.
Tel: 484650
Fax: 447174

Gibraltar
Mail Order International,
c/o Medsun,
P.O. Box 225,
93-99 Irish Town,
Gibraltar.
Tel: 79797
Fax: 74664

Far Eastern Region
Pakistan
Link Pakistan, Suite Number 2, 2nd Floor,
I-R Plaza, Markaz F-10,
Islamabad, Pakistan.
Tel: 51 291406
Fax: 51 282319

Countries and Regions Not Listed
Export Department,
Maplin Electronics plc.,
P.O. Box 3, Rayleigh,
Essex, SS6 8LR,
England.
Tel: +44 1702 554155
xtn 326, 327 or 351
Fax: +44 1702 553935

Export catalogue and pricing details are available from the listed distributors.

MAPLIN
ELECTRONICS AND BEYOND!

LOW DISTORTION OPERATION OF LM358 & LM324

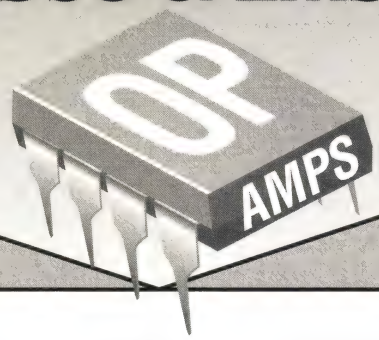

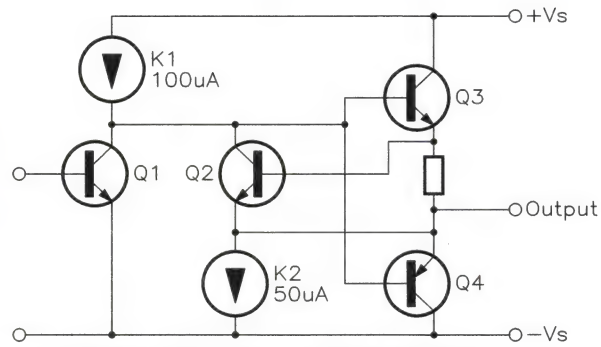

Figure 1. Simplified output stage circuit of LM358 and LM324.

by J. M. Woodgate B.Sc.(Eng.), C.Eng., M.I.E.E., M.A.E.S., F.Inst.S.C.E.

The LM358 dual op amp (UJ34M) and its quad relative, the LM324 (UF26D) have a number of advantages:

- Wide power supply voltage range 3 to 32V, single-ended or dual-rail
- Low supply current drain
- Low input bias current, with temperature compensation
- Low input offset voltage and current
- Input common-mode voltage range includes *negative rail*
- Large output voltage swing
- Low cost!

The italics for *negative rail* in the above are because the data sheet concentrates on single-rail operation and tends to confuse signal ground with negative rail in the mind of the reader.

Something for Nothing?

With all these advantages, why use anything else? Well, there is *always* a snag. The low current drain is achieved by a special output stage configuration, shown in Figure 1, which is extracted and slightly simplified from the manufacturer's schematic. Apart from transistor Q2, which is only for short-circuit protection, it looks much like any other push-pull output stage. But, the bases of the output transistors are connected together, so there is no base bias and thus *no quiescent current through* Q4, and only 50μA at most through Q3 via the current sink K2, less any leakage through Q2. The output devices operate very nearly in Class B for output currents larger than about 100μA rms, so it is not surprising that crossover distortion occurs, unless something is done about it. For some applications, such as the amplification and processing of analogue control signals, such distortion matters little, and it may not be necessary to do anything. But, for audio applications, it is at least highly desirable to prevent this form of distortion, because it sounds very nasty indeed!

Data Sheet

The data sheet mentions this effect, and indicates how to handle it, but only for single-ended 5V supply operation. It specifies a 6·2kΩ resistor from the output to 'ground', but if you do this with, say, ±12V supplies, it will not work properly. First, you have to translate 'ground' to mean 'negative rail', in the case of split supplies, and 6·2kΩ is not the optimum value for ±12V operation.

Investigation

The problem with this sort of investigation is that there are millions of possible test circuits that it would be useful to examine, but never enough time to do so. I have picked two examples, both operating from ±12V supplies. For other supply voltages, different values of biasing resistor would be needed. To find the value, you need an oscilloscope and a sine-wave oscillator (or an audio spectrum analyser, if you are very rich!).

Crossover distortion is due to the reduction of current gain (or mutual conductance, whichever way you look at it) of the output transistors at very low collector currents. In text books, a sine wave with crossover distortion is shown as in Figure 2, but we shall see that this is not necessarily correct. The only way to eliminate it is to increase the current in at least one of the output transistors. By strapping the bases of the output transistors together, the manufacturer has, in fact, prevented us from increasing the current in both transistors, because that would require a voltage between their bases, as in a conventional amplifier. The only way to achieve our aim is to connect a resistor from the output terminal to either one of the supply rails. Connecting to the positive rail increases the current in Q4 (from zero), while connecting it to the negative rail increases the current in Q3. The manufacturer recommends the latter, there is probably a good reason for it, which we may find in the investigation.

The Inverting Buffer

The first test circuit is shown in Figure 3, and is an inverting buffer, intended to feed a high-impedance load. For many audio applications, a maximum signal level of 1V rms is sufficient.

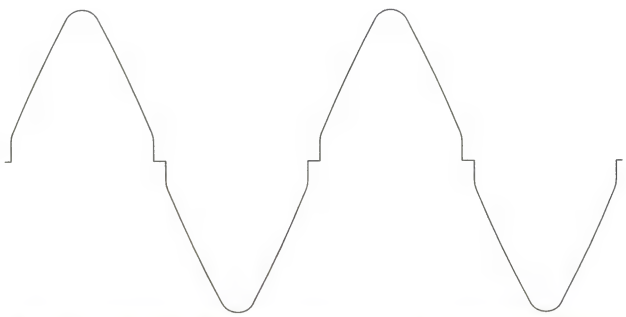

Figure 2. Conventional waveform, showing crossover distortion at the zero voltage level.

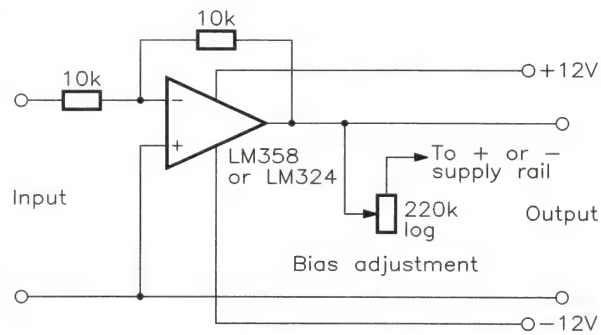

Figure 3. Inverting buffer stage with adjustable bias resistor. A logarithmic potentiometer is easier to adjust at low values.

Crossover distortion is visible on the output waveform at 1kHz, and at 1V output. However, it does not occur at the zero-voltage crossings of the waveform, but way down near the negative peaks of the output signal, as shown in Figure 4. When we measure the distortion, we find that the second harmonic is at –55dB (0·18%) and the third is at –66dB (0·05%). These figures do not seem to be too bad, but we notice that the second harmonic is stronger, whereas the text book says that crossover distortion consists of the third and higher-order odd harmonics. This actually only applies to the symmetrical waveform shown in Figure 2. Any waveform which is not symmetrical about the X-axis (time) is bound to contain even harmonics. The asymmetry is due to the fact that Q3 has some quiescent current flowing in it, while Q4 does not.

Things get much worse at higher frequencies, partly because the open-loop gain of the amplifier falls due to the necessary action of the internal compensation capacitor in preventing oscillation, but also because of charge-storage effects in the output transistors. At 10kHz, the waveform is quite badly bent, and the second harmonic distortion is 3%, the third being 0·8%. Connecting the variable bias resistor (Figure 3) to positive rail first, we find that the crossover glitch on the waveform can be moved up towards the positive peak of the signal (see Figure 5) and then disappears. A value of 41kΩ was required in my test, and the supply current increased from 750 to about 850μA. Both of the distortions were reduced to 0·022%, which is certainly a great improvement. To check on the text books, it is possible to adjust the variable resistor to make the crossover occur as near as possible at the zero-voltage level, by 'tuning' for a local minimum of the second harmonic output. This occurred with a resistor value of 151kΩ, and the second harmonic distortion was 0·4%, but the third harmonic was much larger, at 3·6%. This is clearly not the correct way to set the resistor value.

When we connect the variable bias resistor to the negative rail, we can move the crossover glitches down to the negative peak of the signal waveform, and further reduction of the resistor value then makes them disappear. This required a value of 136kΩ in my test, and at 10kHz, the second harmonic distortion was 0·07% and the third harmonic, 0·03%. These are worse than for the positive-rail bias configuration, but still quite good, and the supply current is somewhat lower. The third harmonic level actually has a minimum with a bias resistor value of 100kΩ, but the second harmonic level continues to decrease with reducing bias resistor value until the output collapses (and the chip draws too much current for comfort!). With a total supply current of 1mA to an LM358, the second harmonic distortion was 0·03% at 10kHz.

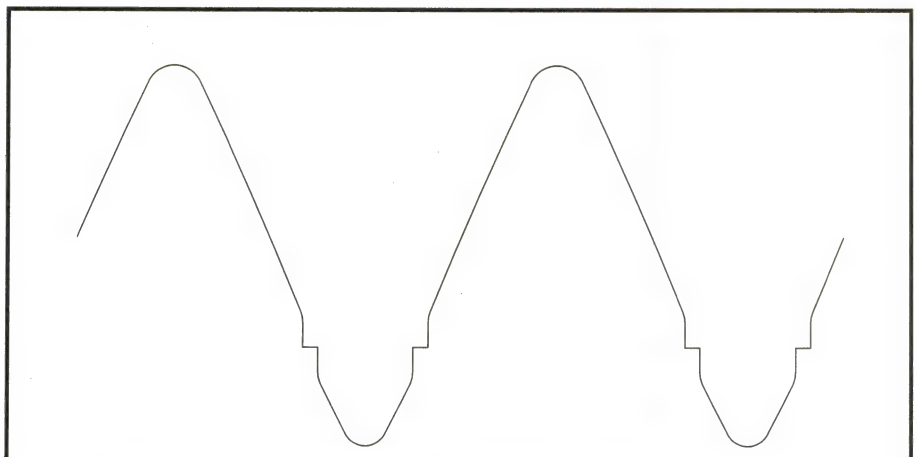

Figure 4. Waveform showing crossover distortion in the negative half-cycles.

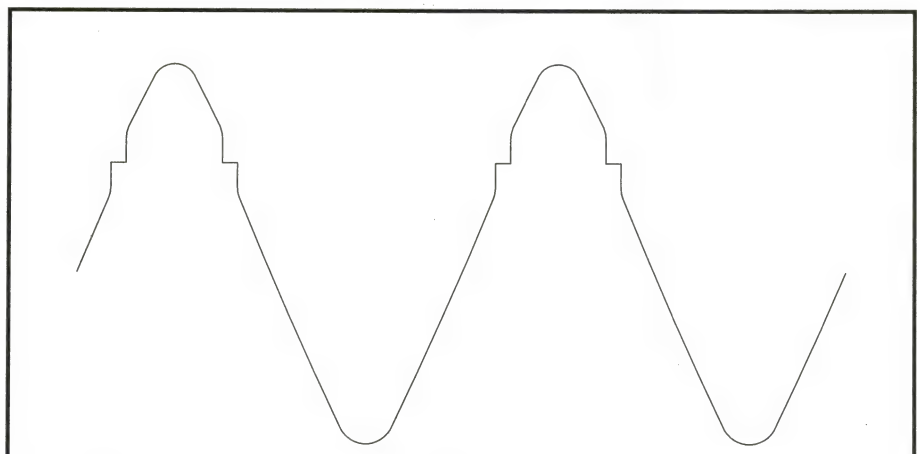

Figure 5. Waveform showing crossover distortion in the positive half-cycles.

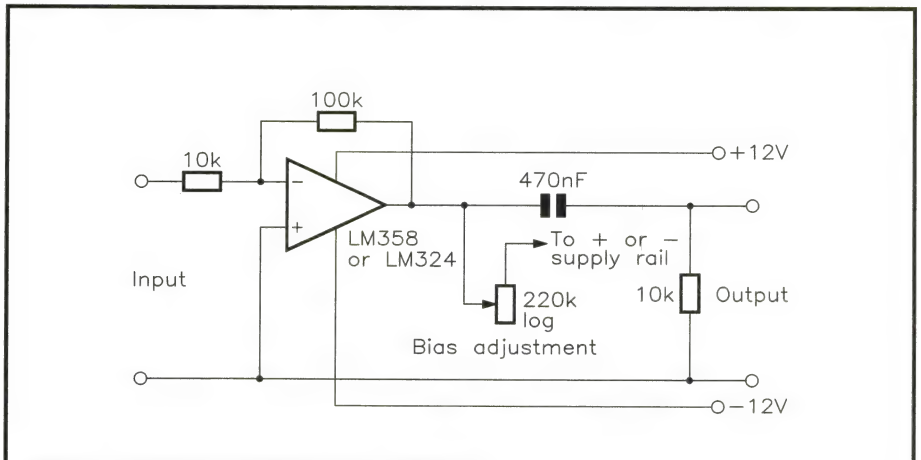

Figure 6. Ten-times gain amplifier with AC-coupled load.

The Ten-times Gain Amplifier

This test circuit is shown in Figure 6, and has an AC-coupled load of 10kΩ. With no bias resistor, performance, even at 1V output at 1kHz, is poor: second harmonic distortion was 0·8% and third harmonic, 0·03%. At 10kHz, these deteriorate to 8% and 1%, respectively. With a 76kΩ bias resistor to negative rail, the improvement was dramatic, the second harmonic fell to 0·14%, while the third fell to 0·03%. In this case, the resistor could be 'tuned' to minimise the third harmonic level.

This sort of amplifier might well be required to produce large signal voltages, but slew-rate limiting occurs at 10kHz, at an output level well below clipping. This is shown by the waveform becoming triangular; at 5kHz, things are better. The output at clipping is 7·4V rms, but a bias resistor of 1·3kΩ was required to eliminate the crossover glitches, and the output clipped asymmetrically at the positive peak. 6·6V rms could be obtained with 0·13% second harmonic and 0·56% third harmonic. Without the bias resistor, the values were 0·7% and 4%!

Don't Forget . . .

The bias resistor values that I have quoted apply to my test circuits and device, with ±12V supply rails. For other operating conditions, there is no alternative to adjusting or selecting the bias resistor while looking at the waveform or measuring the distortion with a spectrum analyser. A distortion-factor meter will not give results you can understand, because it measures all the harmonics simultaneously. If you use a variable resistor to find the optimum value, the next lower preferred fixed value resistor should be substituted.

ELECTRONICS SOFTWARE

If you are looking for a means of improving your knowledge of the basics of electronics then this software is for you.

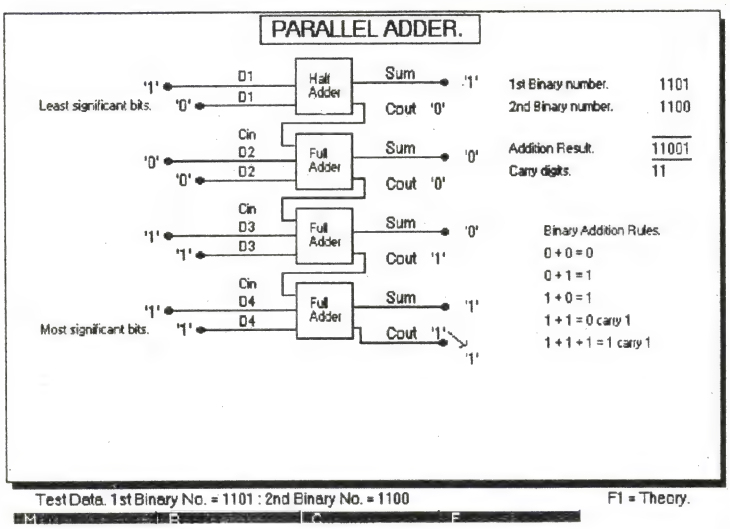

ELECTRONICS PRINCIPLES 2.1

★ Insulators, Conductors, Resistance ★ D.C. Circuits
★ Capacitance and Inductance ★ A.C. Series Circuits
★ A.C. Parallel Circuits ★ Reactance and Impedance
★ A.C. and D.C. Power ★ Frequency and Tuned Circuits
★ Using Numbers ★ Complex Numbers, Phase Angles
★ P.N. Junction Diode ★ Bi-polar and MOSFET Transistors
★ Operational Amplifiers ★ Logic Gates ★ Digital Number Systems
★ Combinational Logic ★ Flip Flops ★ Counters and Shift Registers
★ Memory ★ Microcomputer operation

Now an extended range of electronics topics with an improved graphics presentation, available to electronics hobbyists, students, schools, colleges, and used for training within industry throughout the UK and overseas. A fully interactive electronics program where the user selects from over 250 analogue and digital topics. Circuit diagrams, wave forms, phase angles, voltages and currents or logic states are shown, drawn to scale, in full colour. Formulae are given demonstrating all the calculation steps, exactly as in a textbook, using your input values.

An 'on screen' electronics package including circuit theory to enable a learning through doing approach to encourage experimentation. For the young student, mature hobbyist or the engineer that just needs to keep up-to-date in an easy and enjoyable way.

Having reviewed a dozen, or more, educational software packages designed to "teach" electronics, I was more than a little sceptical when I first heard about Electronics Principles: *there seemed to be little that could be done that has not been done elsewhere. When I started to use the package my views changed. Indeed, I was so impressed with it that I quickly came to the conclusion that readers should have an opportunity to try the package out for themselves!* – MIKE TOOLEY B.A. Dean of Faculty of Technology, Brooklands Technical College.

Complete package **Still only £49.95**

ELECTRONICS PC TOOLBOX VERSION 2.0

An extended and improved version of the popular Toolbox software. Presents commonly used formulae in a way that makes calculations easier thus encouraging experimentation in circuit design.

Covers **D.C. Calculations** from Ohm's Law to Loading a Potential Divider; **Further D.C. Calculations** from Power Ratio Decibels to Kirchhoff's Laws; **A.C. Calculations** from Average Peak Current to Filters and Admittance; **Capacitance Calculations** from Values to RC Time Constants; **Inductance Calculations** from Values to Selectivity; **Binary Calculations** from Addition to 2's Complement; **Numbers and Phase Angles** from Addition to Polar to Rectangular; **Operational Amplifiers** from Inverting Op.Amp to Op.Amp Differentiator. **Only £19.95**

GCSE ELECTRONICS VERSION 2.0

Designed to complement the *EPE Teach-In No. 7* publication, which contains a complete electronics course aimed at GCSE and A Level students, this software can also be used as a stand alone learning package for everyone interested in electronics. From simple d.c. current flow and Ohm's Law it covers the whole GCSE syllabus including a.c., semiconductors, op.amps, digital electronics, radio and fibre optic communications, digital numbering systems and goes on to look at microprocessor c.p.u.s, 6502 addressing modes and instruction sets. It even produces a program listing, which can be saved or retrieved from hard disk, when any of the instructions from the listed instruction set are input, thus allowing the user to monitor the registers for each of the addressing modes.

The original version is now widely used in schools and colleges throughout the UK.

An interactive, user friendly medium which assists learning in an enjoyable and interesting way. **Only £39.95**

For more information or software upgrades call us on 01376 514008

GCSE MATHS now version 2.0

A series of programs **covering all the major topics** required by the school syllabus. Designed to be user friendly enabling you to study or revise in what we believe is an interesting and enjoyable way. There are nearly one hundred and fifty menu driven screens with interactive graphics, enabling a "learning through doing" approach to encourage experimentation. Now being used in many schools throughout the UK. **Only £49.95**

JUST FOR FUN!

EPT Lottery Selector. Windows version.
£5.00 + £1 p&P

These programs require a PC (or fully compatible system) running DOS or Windows with an 80286 or better processor and VGA (ideally colour) graphics. In addition you must have 4Mb of hard disk space, a high density (1·44Mb) floppy drive and at least 640K of RAM. We also recommend the use of a mouse. Site licences are available – please enquire.

Available from

EPT Educational Software, Pump House, Lockram Lane, Witham, Essex. UK. CM8 2BJ. Tel/Fax: 01376 514008.

Add £2 per order for UK post and packing. Make cheques payable to EPT Educational Software.

Visa and **Mastercard** orders accepted – please give card number, expiry date and cardholders address if different from the delivery address.

OVERSEAS ORDERS: Add £2.50 postage for countries in the E.E.C. Overseas readers, **outside the E.E.C. countries** add £3.50 for airmail postage.

ORDER COUPON

In any correspondence please quote your customer number. *Date* .....

MAPLIN
ELECTRONICS AND BEYOND

P.O. Box 3, Rayleigh, Essex SS6 8LR.
Telephone, Credit Card Sales (01702) 554161; Enquiries (01702) 552911.
Overseas Customers, Telephone +44 1702 554000 Ext. 326, 327 or 351.

A different postal code is correctly shown on the reply paid envelopes.

Please make cheques payable to 'Maplin Electronics plc'.
On occasion Maplin Electronics may permit other reputable companies to make offers of products or services which we believe will be of interest to our customers. If you do not wish to receive this information please write no in the box.

Customer No. .....

Name .....

Address .....

.....

Postcode ..... *Phone No* .....

IT IS MOST IMPORTANT THAT YOU INCLUDE YOUR POSTCODE

Block capital letters please. ***Keep a copy of your order.***

*Please enter catalogue page no. where item appears. If not in catalogue, write Mag for Magazine or SO for Special Offers etc. If not using 1996 catalogue, enter date of catalogue here: 19.....

Description (for your information only)	**Page***	**Order Code**					**Quantity**	**Price Each**	**£ Total**	**p**	**£ Carriage Charge**	**p**
Price Change Leaflet (Please write 1 in quantity, if required)		C	A	9	9	H		FREE	0	00	0	00
1996 Maplin Catalogue		C	A	1	3	P		£3.45 *NV*			0	00
Electronics – The Maplin Magazine Subscription (UK 6 Issues)		X	A	0	0	A		£11.88 *NV*			0	00
Electronics – The Maplin Magazine Subscription (UK 12 Issues)		X	A	0	0	A		£23.76 *NV*			0	00
Electronics – The Maplin Magazine Index	467	X	U	8	7	U		80p *NV*			0	00
Electronics – The Maplin Magazine Binder	467	X	H	9	9	H		£6.99			0	00

Form ME94 Issue 1

Access VISA AMERICAN EXPRESS

PHONE BEFORE 5pm FOR SAME DAY DESPATCH

Overseas Customers including Channel Isles and Eire, please deduct VAT where applicable and tick box.

Export Order ☐

Office Use Only

DOR	CQ	CA	PO
CNC	Total		
CNM			

I authorise you to debit my credit card account for the cost of goods despatched.

Credit Card Number

Access/American Express/Visa.....Delete as required.

Note: Goods will be despatched only if the address above is the cardholder's address. If ordering by credit card please sign:

.....

Expiry date of Credit Card.....

Total this sheet £				
Total other sheet(s) £				
Total for goods £				
Carriage charges for large, fragile, or heavy items as shown in catalogue. If total in this box exceeds £6.00 you need only pay £6.00 (Max. Carr. Charge per order £6.00).				
Deduct value of Credit Note No. Enclose the numbered Credit Note with this order.			**Carriage Charges**	
Deduct value of Gift Token No. (Enclose Gift Token with order.)			A	£1.60
Please add £1.55 Handling Charge. This amount must be added to each order placed.*	1	55	B	£2.30
*Except if only ordering a Catalogue or Magazine Subscription **Total £**			C	£2.90
			D	£3.40
			E	£4.00
			F	£4.70
			G	£5.50
			H	£6.00

SUBSCRIBE TO

BRITAIN'S BEST SELLING ELECTRONICS MAGAZINE!

ELECTRONICS
The Maplin Magazine

- **2 FREE ISSUES** if you agree to subscribe by Direct Debit or Continuous Credit Card, saving you £6.12!
- **FREE DELIVERY TO YOUR DOOR,** and there are no additional carriage charges.
- **YES, SAVE MONEY** by taking a subscription, it's cheaper than buying each individual copy.
- **REGULAR SUBSCRIBERS' SPECIAL OFFERS** Super savings on selected products!
- ***PLUS*** – News, reviews, readers letters, competitions and lots, lots more besides!

To subscribe just send a cheque/postal order for £11.88 made payable to Maplin Electronics, P.O. Box 3, Rayleigh, Essex SS6 8LR. **OR** you can take advantage of our offer of two free issues by completing the coupon below and agreeing to pay by Credit Card or Direct Debit. The two free issues offer only applies if you use one of these two methods of payment. Simply fill in the 'Payment by Credit' or 'Payment by Direct Debiting Mandate' and return it to Maplin. Every time, about 1 month before your subscription is due, we will send you a letter giving details of the subscription rate and telling you the date on which we will charge your Credit Card or debit your bank account. If you do not wish to continue your subscription, you have until that date to let us know, and we will then cancel your authority to bill your Credit Card or cancel your mandate. Otherwise, if you do nothing, your subscription will continue. The authority or mandate you give us does not allow us to charge anything other than the Maplin Magazine subscription. The benefit to you is that you no longer need to remember to renew your subscription or send off any more cheques or postal orders. Payment is made automatically.

OVERSEAS READERS – *SUBSCRIBE NOW!* – Phone Maplin Export: +44 1702 554155 Ext. 326, 327 or 351. Full details on request.
Subscription rates for 6 issues are: £16.20 (or 40 IRCs) in Eire, Europe and surface mail outside Europe; £24.24 (or 60 IRCs) Air Mail outside Europe.
Subscription rates for 12 issues are: £32.40 (or 80 IRCs) in Eire, Europe and surface mail outside Europe; £48.48 (or 119 IRCs) Air Mail outside Europe.
AFRICAN READERS – SUBSCRIBE NOW! – Phone Maplin South Africa: +27 24 51 5124.
Subscription rate for 6 issues is: R114,00; Subscription rate for 12 issues is: R215,00.

TAKE THE NEXT 2 ISSUES OF THIS MAGAZINE FREE!!

Because we're so certain that now you've seen the Maplin Magazine you'll want to receive it regularly, we're offering to send you the next two issues free of charge with absolutely no obligation to continue. Just fill in the details below and if after receiving two issues you do not wish to continue, just let us know at least one month before the next issue is due and we will cancel your subscription. The two free issues will be yours to keep whatever you decide. If you already have a subscription, fill in the details below and we'll add two issues free of charge to your current subscription. SEND NO MONEY NOW. About 2 weeks before the third issue is due, we will charge you £11.88 for the next six issues, unless you have cancelled. This offer is not available to those already paying by Direct Debit or Continuous Credit Card or those who have stopped payment by either method within the last year. **THIS OFFER IS OPEN TO RESIDENTS WITH U.K. ADDRESSES ONLY.**

PLEASE START MY SUBSCRIPTION WITH ISSUE ☐ (If left blank subscription will start from next issue.)

EITHER

★ PLEASE ADD YOUR ADDRESS, SEE BOTTOM RIGHT ★

PAYMENT BY CREDIT CARD. Please charge my Credit Card Account

Customer Number (if known) .....

Access ☐ Visa ☐ American Express ☐ Expiry Date of Card ☐/☐

I authorise you until further notice in writing to debit my CREDIT CARD account by £11.88 and in future, with any amounts which, after notification, MAPLIN ELECTRONICS plc may debit thereto in respect of my subscription to the Maplin Magazine.
Overseas subscribers see above.

Account No.

Signature | Date

OR

PAYMENT BY DIRECT DEBITING MANDATE in favour of Maplin Electronics plc, P.O. Box 3, Rayleigh, Essex SS6 8LR.
Direct Debit payment option is only open to customers with bank accounts in the U.K. including Channel Isles, Isle of Man and N. Ireland.
Please note: Instructions cannot be accepted to charge Direct Debits to a Deposit or Savings Account.

DIRECT Debit

Bank Sort Code

Bank Account Number

Name of account to be debited

Bank Address

I authorise you until further notice in writing to charge my account, with you, any amounts which MAPLIN ELECTRONICS plc may debit thereto by Direct Debit in respect of my subscription to the Maplin Magazine.

I will inform the bank in writing if I wish to cancel this instruction.

I understand that if any direct debit is paid which breaks the terms of this instruction, the bank will make a refund.

Signature | Date

Enter your address and Maplin customer number, if known.

Postcode

Put this form in an envelope and address it to: Maplin Electronics, Freepost, P.O. Box 3, Rayleigh, Essex, SS6 2BR.

What's On?

TMA Conference

Coming hard on the heels of the quadrennial Telecoms event in Geneva, TMA Conference looks set to have a critical influence on the development of the telecommunications industry in the UK. The overall theme for November's Brighton forum is 'Telecoms: Empowering the Business'. At this November's TMA Conference, the emphasis will be placed on case history presentations, showing how the emerging voice, image and data communications technologies are changing the ways in which companies operate and are bringing significant benefits.

The series of 45 minute sessions, with presentation plus question and answer elements, is divided into nine streams. The programme gives delegates to the three day forum the chance to select what they want to see, according to their own interests and schedules. The streams are: 'Empowering the Enterprise', 'Multimedia at Work', 'Focus on Customers', 'Telecoms at the Desktop', 'Cable Communications at Work', 'Mobile Communications', 'The Internet in Business', 'Computer Telephony Integration', and 'ATM and Other Broad Band Strategies'. These sessions, beginning on Monday 27 November, focus on how the adoption of telecommunications technologies have had a dramatic impact on the ways companies conduct business.

Contact: TMA Ventures, Tel:(01372) 361000.

Intellectual Property Rights and the Superhighway

'Intellectual Property Rights (IPR), the Infobahn and the Labour Market', was a conference at the beginning of September, which examined Intellectual Property Rights in the light of the Information Superhighway. The conference was organised by the Labour Telematics Centre on behalf of the National Union of Journalists and Manchester Telematics Training, and took place at the GMB National College, Manchester.

This conference brought together organisations representing writers, journalists, broadcasters, photographers, designers, film-makers, musicians, actors, software developers, and others, in an attempt to define an approach that will work in their interests, and help make the information society a reality.

Already, the first skirmishes have been fought, in what promises to be a long war. Disputes over moral rights, the Uruguay Round of international trade talks, the European Commission's draft directive on the protection of databases, the Commission's directive on software copyright, and the demands by various publishers and broadcasters to obtain exclusive rights to intellectual property in perpetuity have been inconclusive, but have demonstrated the growing urgency of a new approach to IPR. Without it, the information society will simply fail.

Contact: GMB National College, Tel: (0161) 860 4364.

Hyperspace at the London Planetarium

Don't miss the dynamic physicist and radio host, Professor Michio Kaku, as he unlocks the deepest secrets of space on Wednesday 11th October at the London Planetarium!

Michio Kaku is Professor of Theoretical Physics at the City University of New York. He hosts a weekly hour-long science programme on New York's public radio station, WBAI. His book also entitled 'Hyperspace', takes the reader on a tour of the most exciting works in modern physics, including research into the tenth dimension, time warps, black holes, and multiple universes.

This special event attempts to answer questions that have baffled us for centuries, including, Is time-travel possible? Can we change the past? Are there other dimensions beyond our own? What will life be like in the year 4000 and beyond? Come and experience for yourself, a scientific odyssey through parallel universes, time warps and the 10th Dimension! Tickets £5 (Students £4.50). Doors open 6.30pm. Contact: Diane Robertson, Press Officer. Tel: (0171) 935 6861.

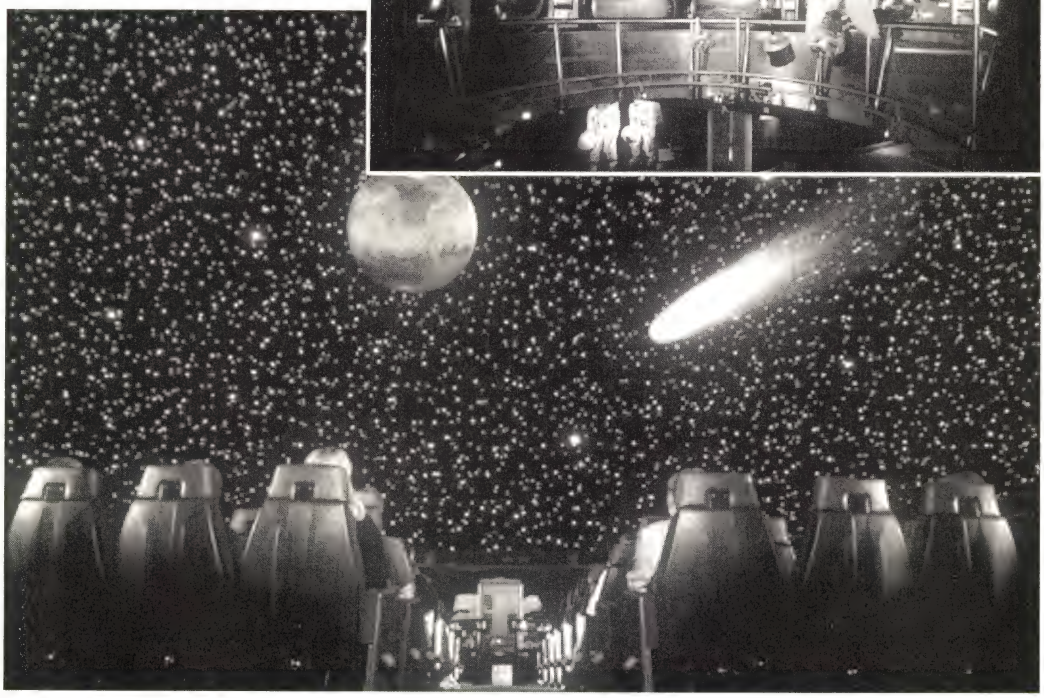

DIARY DATES

Every possible effort has been made to ensure that the information presented here is correct prior to publication. To avoid disappointment due to late changes or amendments, please contact event organisations to confirm details.

3 to 5 October. Electronics Data Exhibition, NEC, Birmingham. Tel: (0181) 742 2828.

4 to 6 October. Electronic Data Exhibition, ICC, Birmingham. Tel: (0181) 742 2828.

11 October. Hyperspace – Special event at the London Planetarium. Professor Michio Kaku unlocks the deepest secrets of space. Doors open 6.30pm. Tel: (0171) 486 1121

12 to 13 October. Electrical Engineering Show, Forte Post House Hotel, Basildon. Tel: (01732) 359990.

20 to 21 October. Leicester Amateur Radio Exhibition, Granby Halls, Leicester. Tel: (01707) 659015.

23 October. RSGB Council member, David Whalley, G4EIX, Stratford-upon-Avon & District Radio Society. Tel: (01789) 773286.

24 to 25 October. Radio Solutions, NEC, Birmingham. Tel: (0121) 622 6868.

25 October. Junk Sale, Lincoln Short Wave Club, Lincoln. Tel: (01427) 788356.

27 to 29 October. Acorn Road Computer Show, Wembley Centre, London. Tel: (01295) 788386.

7 to 9 November. Software Development Exhibition, NEC, Birmingham. Tel: (0181) 742 2828.

8 to 11 November. Apple Expo, Olympia, London. Tel: (0171) 388 2430.

10 to 12 November. Design & Technology Education Exhibition, NEC, Birmingham. Tel: (01425) 272711.

11 November. Bingley Hall, Staffordshire Showground, Stafford. Tel: (01473) 272 002.

13 November. A DXpedition, Vincent Denecker, G0MLX, Stratford-upon-Avon & District Radio Society. Tel: (01789) 773286.

21 November. Weather Satellites – An illustrated talk from Mark Clarke, Bury St. Edmunds Amateur Radio Society, Suffolk. Tel: (01284) 764804.

22 November. Construction Contest, Lincoln Short Wave Club, Lincoln. Tel: (01427) 788 356.

27 November. Baluns and Matching, David Yates, G3PDQ, Stratford-upon-Avon & District Radio Society. Tel: (01789) 773286.

28 to 30 November. Computer Graphics Expo, Wembley Centre, London. Tel: (0181) 995 3632.

7 to 11 December. Computer Shopper Show, Wembley Centre, London. Tel: (0181) 742 2828.

11 December. Open Evening, Stratford-upon-Avon & District Radio Society. Tel: (01789) 773286.

19 December. Christmas Social, Bury St. Edmunds Amateur Radio Society, Suffolk. Tel: (01284) 764804.

16 January. Annual General Meeting, Bury St. Edmunds Amatuer Radio Society, Suffolk. Tel: (01284) 764804.

23 February. Kingman/Palmyra DXpedition by Vincent Denecker, Stratford-upon-Avon & District Radio Society. Tel: (01789) 773286.

12 February. DX Cluster, John Clayton, G4PDQ. Tel: (01789) 773286.

26 February. Stratford-upon-Avon & District Radio Society. Tel: (01789) 773286.

Please send details of events for inclusion in 'Diary Dates' to: News Editor, *Electronics – The Maplin Magazine*, P.O. Box 3, Rayleigh, Essex SS6 8LR.

MAINS FAILURE ALARM

2 PROJECT RATING

Design by Alan Williamson
Text by Alan Williamson and Maurice Hunt

FEATURES

- ★ Easy to build and use
- ★ Compact, self-contained unit within wall-plug-type casing
- ★ Visual and audible indication of mains failure
- ★ Built-in Ni-Cd battery back-up and charging circuitry

APPLICATIONS

- ★ Kitchens and catering areas
- ★ Computer rooms
- ★ Factories, warehouses, offices

KIT AVAILABLE (90047) Price £19.99

A corruption in the normally dependable mains power supply that we all take for granted, be it a brief interruption or a power cut lasting for up to several hours, can at best, cause disruption and nuisance, and at worst, expensive damage to equipment used within the home and at work. A few such examples of vulnerable everyday items of equipment, are fridge freezers, computers, and alarm systems, whose unexpected downtime can create quite a problem. Use this project to give an immediate warning of failures in the supply of mains electricity, so that necessary measures can be taken before it is too late to prevent the thawing-out of frozen food stocks, loss of computer data or breaches of security, and prevent the next mains failure from turning into a disaster!

This unit gives both an audible alarm, and visual indication of a mains supply failure, by means of a flashing LED, the 'drop out' causing the unit to be instantly latched into its alarm state. When (if!) the mains supply is re-established, the sounder will be muted, whilst the 'Fail' LED will remain flashing to alert you to the fact that

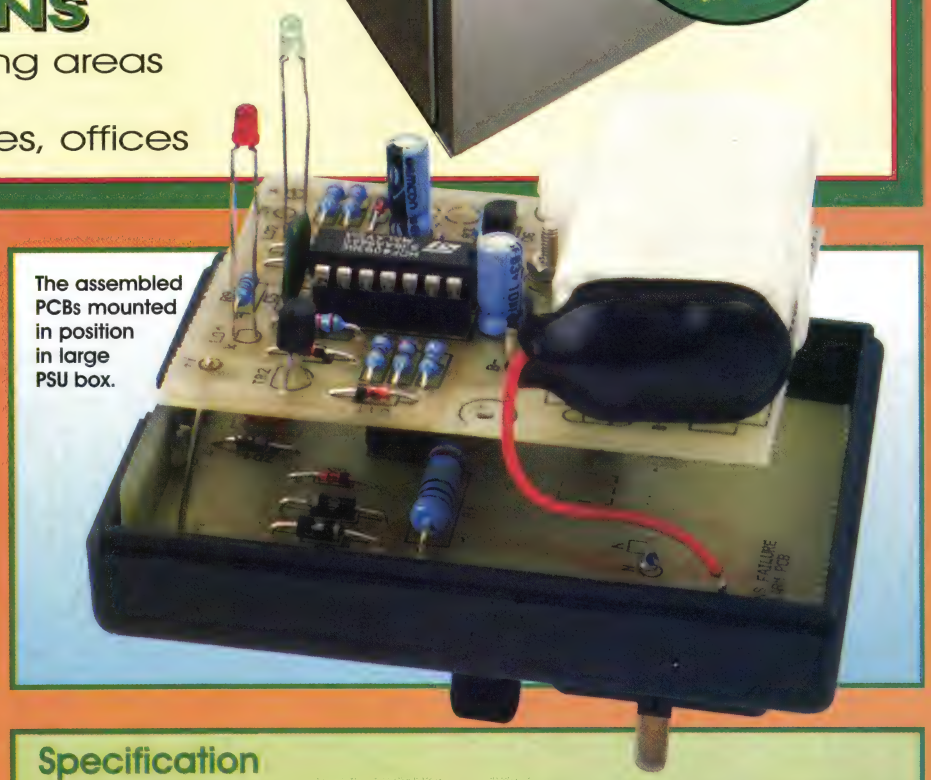

The assembled PCBs mounted in position in large PSU box.

Specification

Power supply:	UK Domestic mains 230V, 50Hz AC, and 7·2V Ni-Cd PP3 back-up cell
Supply current (standby; mains power):	5·5mA
Supply current (activated; battery power):	10mA
Battery trickle charge current:	2mA
Case dimensions:	68 x 85·5 x 61·5mm
PCB Dimensions:	143 x 49mm
Mains failure indicators:	Flashing LED and piezo-ceramic sounder

there was a power cut, in case you missed the alarm buzzer. Having been tripped, the alarm may be reset by means of unplugging the unit, then replugging the unit back into the 13A outlet socket. Battery back-up, comprising of an internal Ni-Cd rechargeable battery, and maintained by built-in charging circuitry, powers the circuitry during the mains supply failure. The alarm is built into a self-contained, compact housing, which incorporates a 3-pin wall plug, allowing direct connection to the mains via any convenient wall socket. A second LED (non-flashing) indicates that mains power is being supplied during the standby state, confirming that the unit is ready and waiting for a mains supply failure.

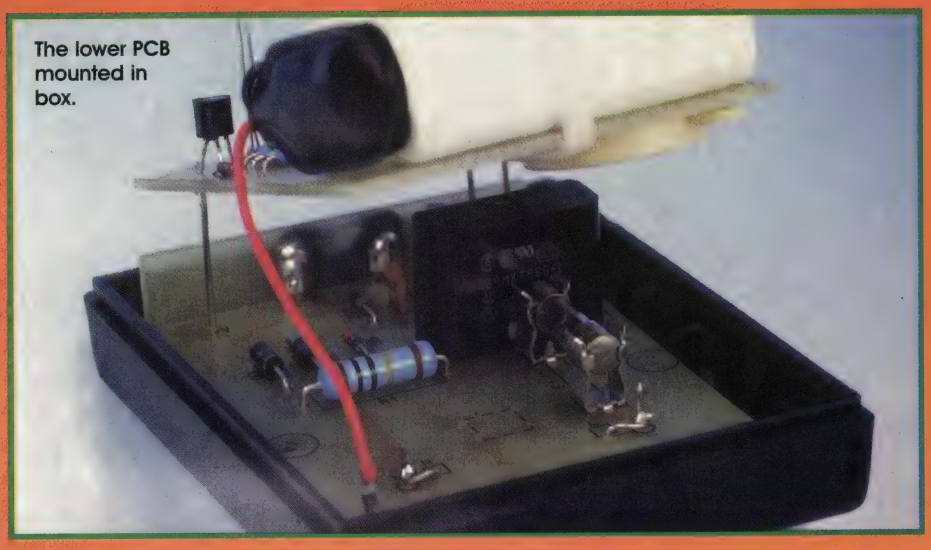

The lower PCB mounted in box.

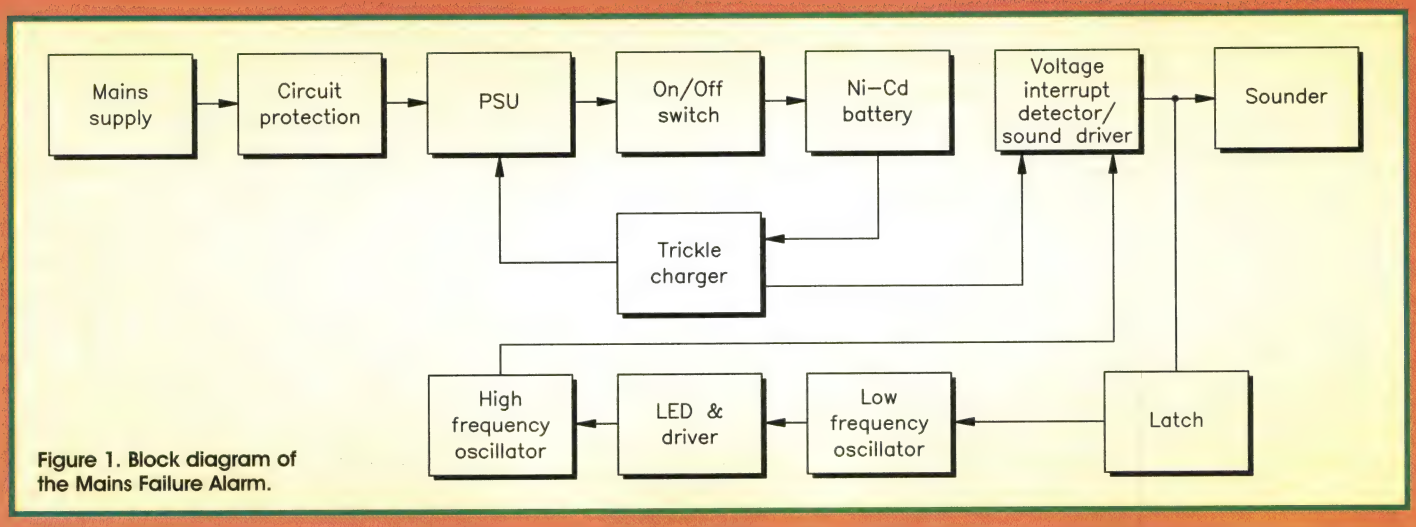

Figure 1. Block diagram of the Mains Failure Alarm.

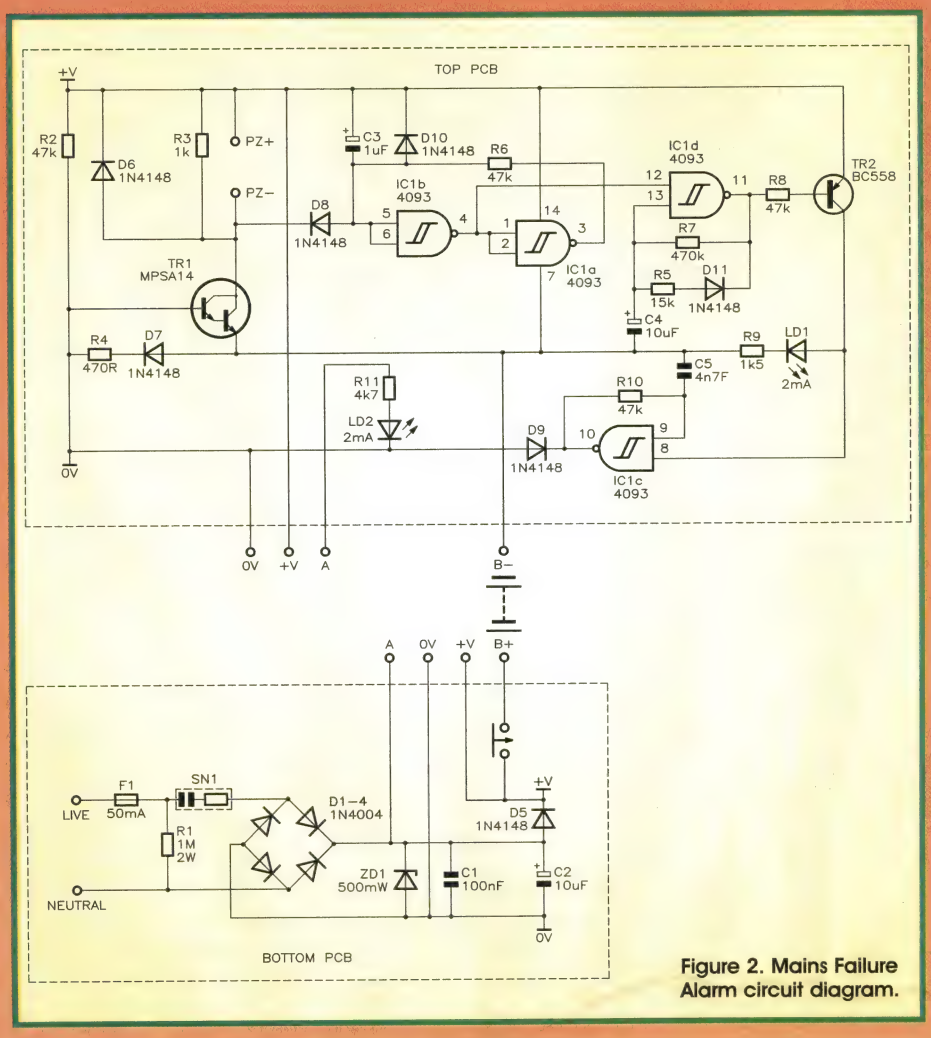

Figure 2. Mains Failure Alarm circuit diagram.

Important Safety Note:

It is important to note that mains voltage is potentially lethal. Full details of mains wiring connections are shown in this article, and every possible precaution must be taken to avoid the risk of electric shock during maintenance and use of the final unit, which should never be operated with the box lid removed. Safe construction of the unit is entirely dependent on the skill of the constructor, and adherence to the instructions given in this article. If you are in any doubt as to the correct way to proceed, consult a suitably qualified engineer. The specified casing is not waterproof, so do not place the unit in areas where it may be exposed to moisture, for instance, bathrooms or adjacent to sinks, washbasins, etc.

Circuit Description

Refer to the block and circuit diagrams, shown in Figures 1 and 2 respectively, which will be of assistance with your understanding of the following description of how this project operates. Push switch S1 is the on/off control, which is operated (switches the unit on) when the unit is plugged into a wall socket. LED LD2 indicates that mains power is being supplied to the circuit during the standby mode. Fault protection to the circuit is afforded by fuse F1, whilst R-C network contact suppressor, SN1, is used to provide AC coupling of the mains supply. The diodes D1 to D4 form the bridge rectifier. Zener diode, ZD1 clamps the rectified waveform to 12V; capacitor C1 helps to

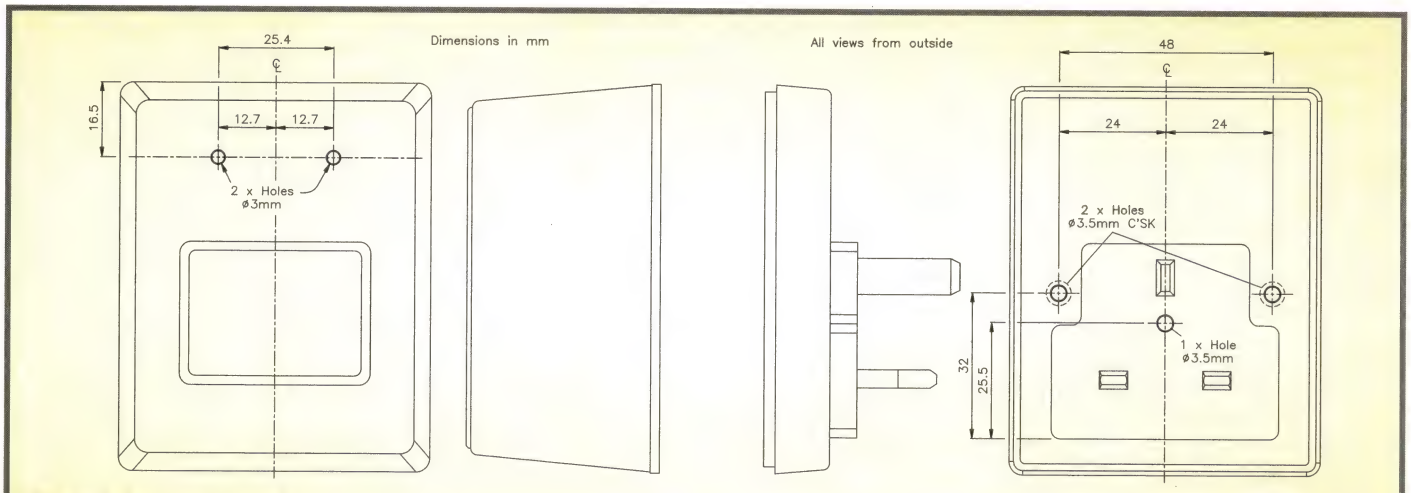

Figure 3. Box drilling details.

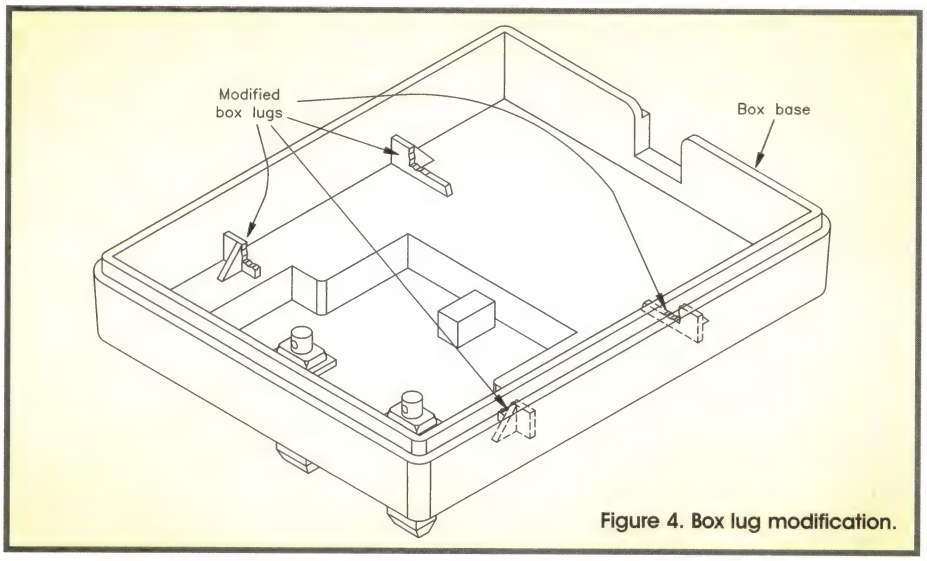

Figure 4. Box lug modification.

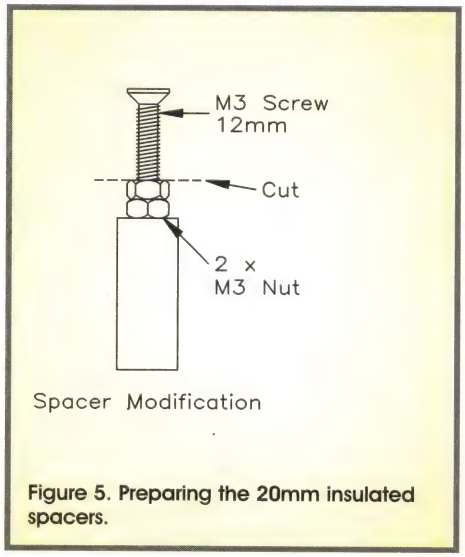

Figure 5. Preparing the 20mm insulated spacers.

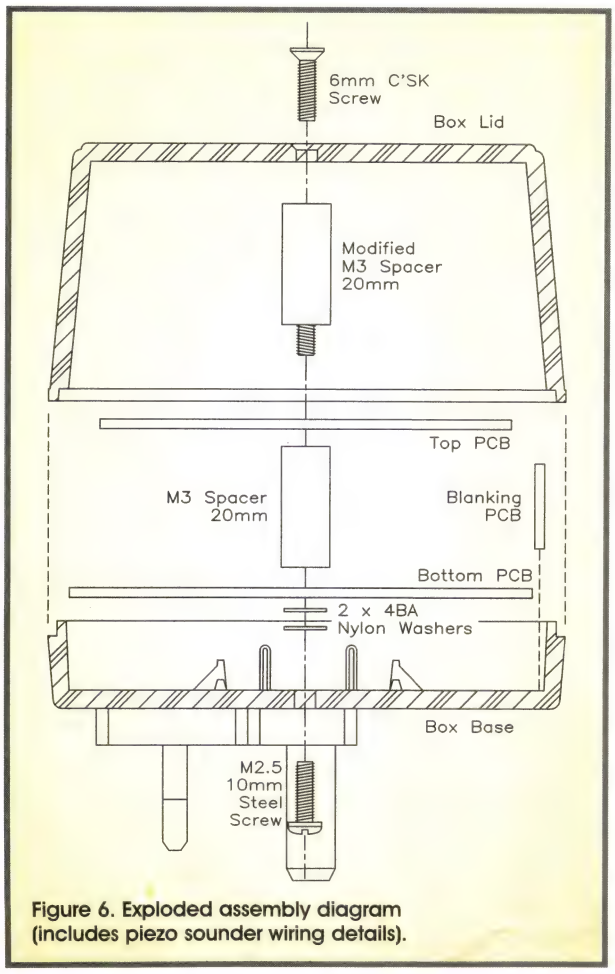

Figure 6. Exploded assembly diagram (includes piezo sounder wiring details).

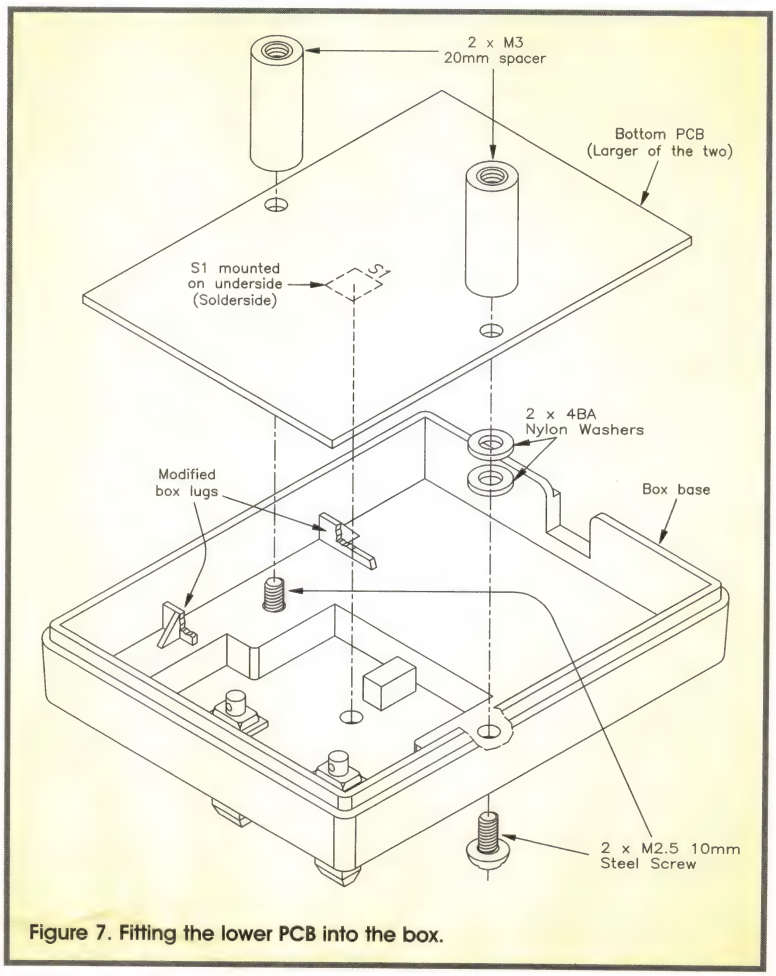

Figure 7. Fitting the lower PCB into the box.

filter out any high-frequency noise, while C2 is the reservoir capacitor; note the small value, this being the minimum permissible in this application. D5 isolates the circuit from C1 and C2 in the main PSU, allowing correct operation from the Ni-Cd battery.

TR1, a Darlington pair device, is employed as the mains supply detector and as the driver for the piezo-ceramic sounder, PZ1. The NAND gates IC1a and IC1b form a bistable latch; Gate IC1d forms a low-frequency oscillator with an unequal mark-space ratio, while IC1c is configured as a gated high-frequency oscillator. With power applied to the circuit from the mains derived supply, the Ni-Cd battery will be trickle-charged, the current limiting resistor being R4; the transistor TR1 will also be biased off (with its base tied to 0V).

However, should the mains supply be interrupted, power will still be supplied to the circuit by the (charged) Ni-Cd battery. TR1 will be biased on by R2, as D7 is now reverse-biased. When TR1 switches 'on', the input(s) of IC1b will be pulled low via D8, which will also cause the output of IC1a to become low, reinforcing the input condition of IC1b. The high output condition of IC1b 'enables' the oscillator formed around IC1d; the low-frequency output of IC1d switches the LED (LD1) on and off via the driver transistor TR2. IC1c is also a gated oscillator, similar to IC1d, only at higher frequency. The 'chopped' high-frequency output of IC1c gates TR1, and in doing so, a pulsed tone will be heard from the piezo sounder, PZ1. Re-establishing the mains supply will switch off TR1, and the sounder will then be muted. However, the LED LD1 will continue to flash until the unit is unpluggedto reset the latch.

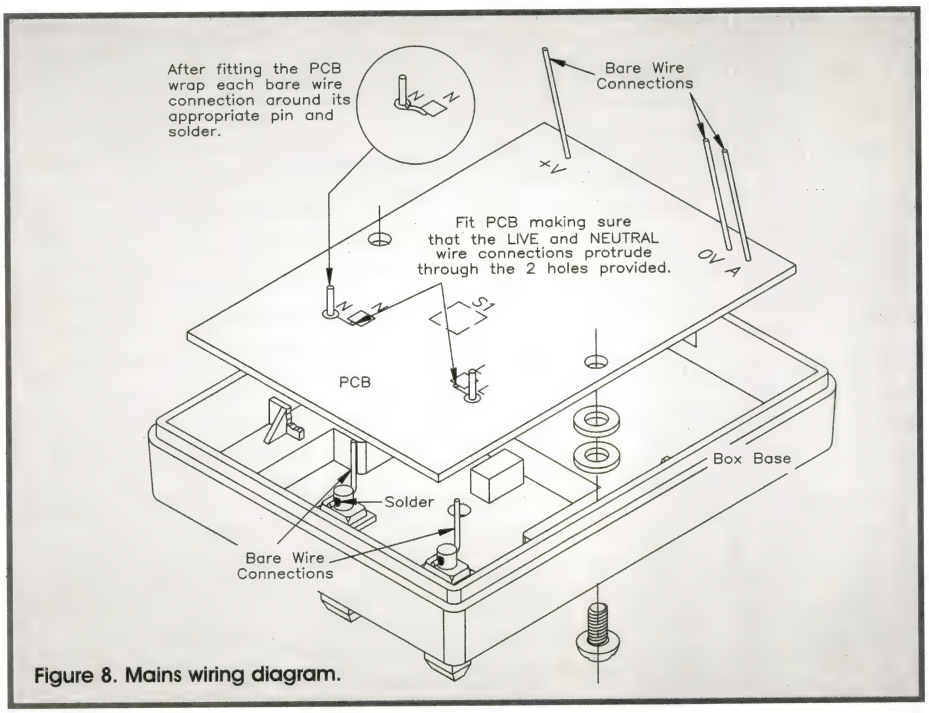

Figure 8. Mains wiring diagram.

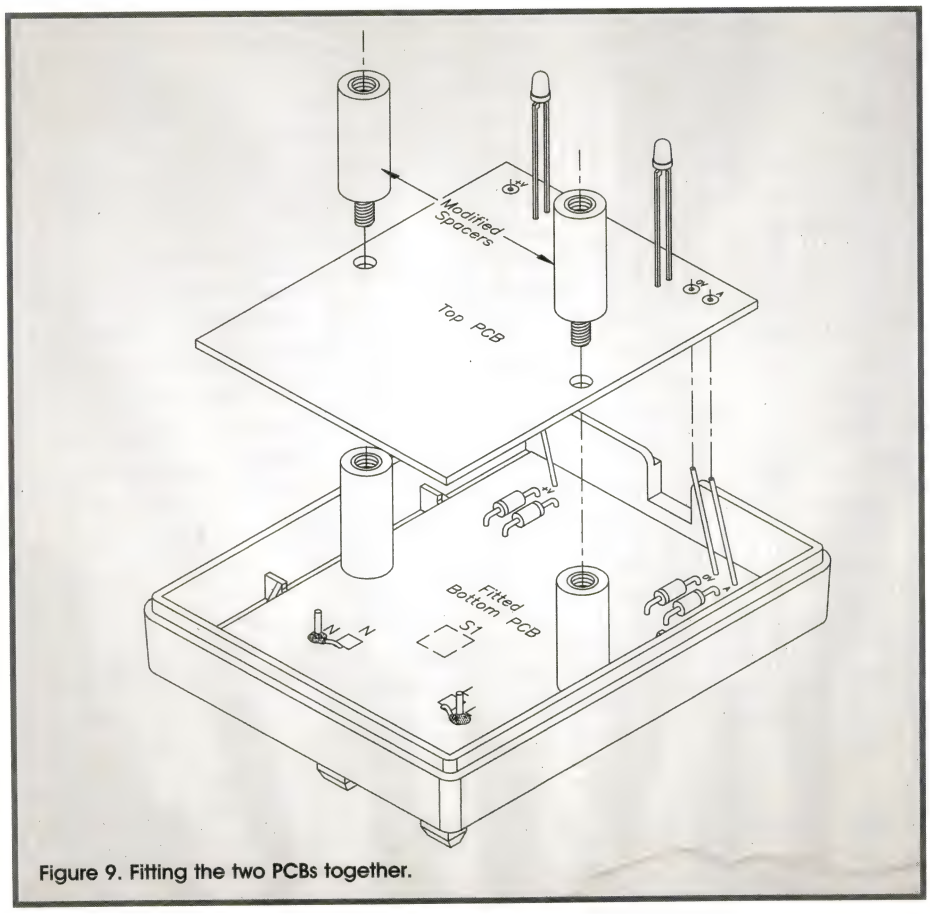

Figure 9. Fitting the two PCBs together.

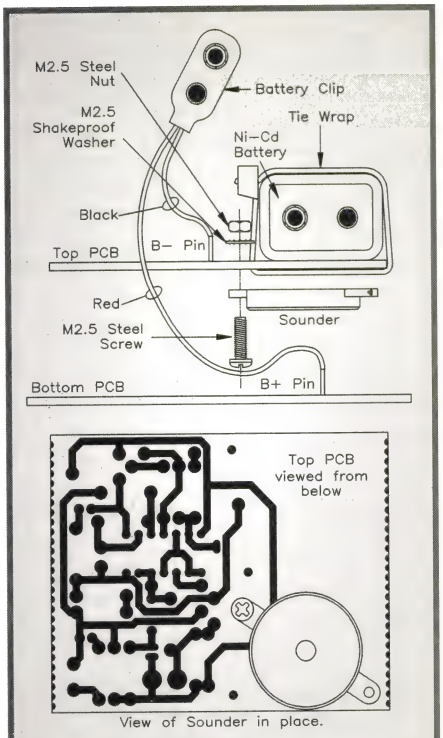

Figure 10. Battery wiring details.

Case Assembly

Box construction is fairly straightforward, and Figure 3 gives the drilling details required. **Please note that this section must be completed before PCB construction.** The bottom half of the box contains the mains plug pins. Note that the specified PCB is designed to be snapped into three separate sections, these being referred to from now on as the lower, upper and blanking PCBs. Begin by modifying the PSU box PCB mounting lugs, as shown in Figure 4, reducing their height to 1·5mm. Refer again to Figure 3, for drilling details of the enclosure for the on/off switch S1, the PCB fixings (top and bottom) and LEDs LD1 & LD2 (note the orientation of the top half of the enclosure with respect to the base). The easy way to find the fixing holes in the lower half of the case is to drop the lower PCB into the bottom of the box.

To countersink the fixing holes in the top half of the enclosure, simply drop the screw into the hole and heat with the tip of a soldering iron; the swarf can then be removed with a sharp knife when cold. Remove the mould ridges (on the inside of the box) from around the LED holes; this also can be done quickly using the tip of a hot soldering iron. Note: take precautions to avoid inhaling fumes – do not do this in a confined space. It may be a good idea to chamfer (from the inside) the

Figure 11. Front panel label.

LED holes to aid alignment when fitting the case lid.

Take care to accurately measure the location of S1, whose mounting hole is positioned 6mm from the Earth pin – Figure 5 shows the insulated spacer modifications to fit the PCBs together, and Figure 6, which illustrates the exploded assembly, clarifies their positioning. Figure 7 shows the lower PCB fitted into the bottom of the enclosure, while Figure 8 shows the mains wiring of the unit. Figure 9 depicts the assembly of the two PCBs, and the wiring for the Ni-Cd battery is given in Figure 10.

Once the case preparation is completed, cut the spare edge off the front panel label, and attach the offcut to the blanking PCB. Attach the main portion of the label (depicted in Figure 11) to the front panel of the enclosure; trim around the holes using a sharp craft knife or scalpel.

Note for reasons of electrical safety there are no holes in the casing to emit sound – DO NOT attempt to drill extra holes.

PCB Construction

The first thing to be done is to charge the Ni-Cd battery, whilst you build up the project. Refer to Figure 12 when assembling the PCB, which shows the legend and track details for the board. All components are mounted in the conventional manner (in order of ascending component size – smallest to largest), with the exception of S1 and PZ1, which are mounted on the track side. See Figure 13 for S1 mounting details, and Figure 14 for the LED height.

Insert PCB pins from the track side in the following positions only (with a legend circle): L, N, B+ and B–, plus two pins next to ZD1 & C1. Be careful to correctly orientate the polarised devices, i.e. electrolytic capacitors, diodes, transistors, and the IC, which should be inserted into its socket last of all. Cut five 25mm lengths of the supplied tinned copper wire; solder one each to the PSU box Live and Neutral pins, in accordance with the legend on the PCB; solder the remaining three links to the '+V', 'A', and '0V' positions on the **lower** PCB. IMPORTANT, crop all component leads to within 1·5mm of the PCB surface. Connect the piezo sounder and battery clip to the appropriate connections on the board, as per Figures 7 and 11, respectively. Thoroughly check your work for misplaced components, solder whiskers, bridges and dry joints. Finally, clean all the flux off the PCB using a suitable solvent. Before installing into the enclosure, double-check EVERYTHING!

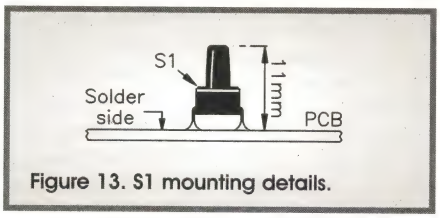

Figure 13. S1 mounting details.

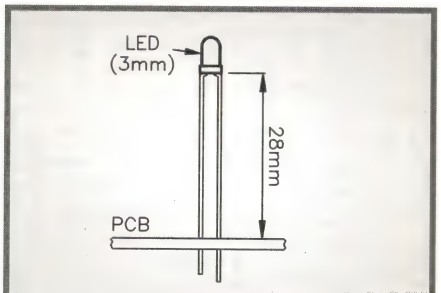

Figure 14. LED mounting details.

Assembly

With the box prepared as described, pass the two M3 × 10mm screws through their holes, and place two 4BA nylon spacers over each screw (four in all) – these prevent the lower PCB from being bent when the screws are done up; CAUTION, do not overtighten the screws. Pass the free ends of the Live and Neutral leads through their

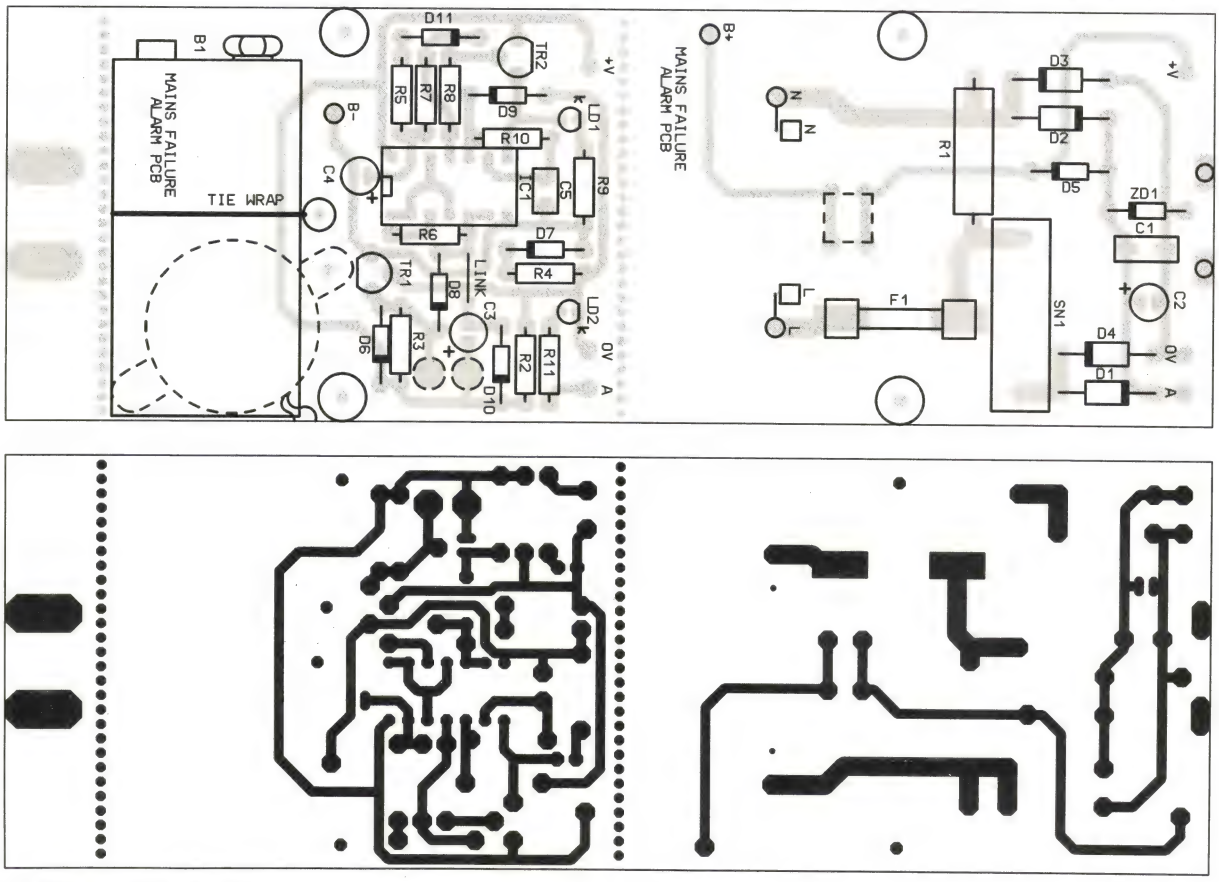

Figure 12. PCB legend and track.

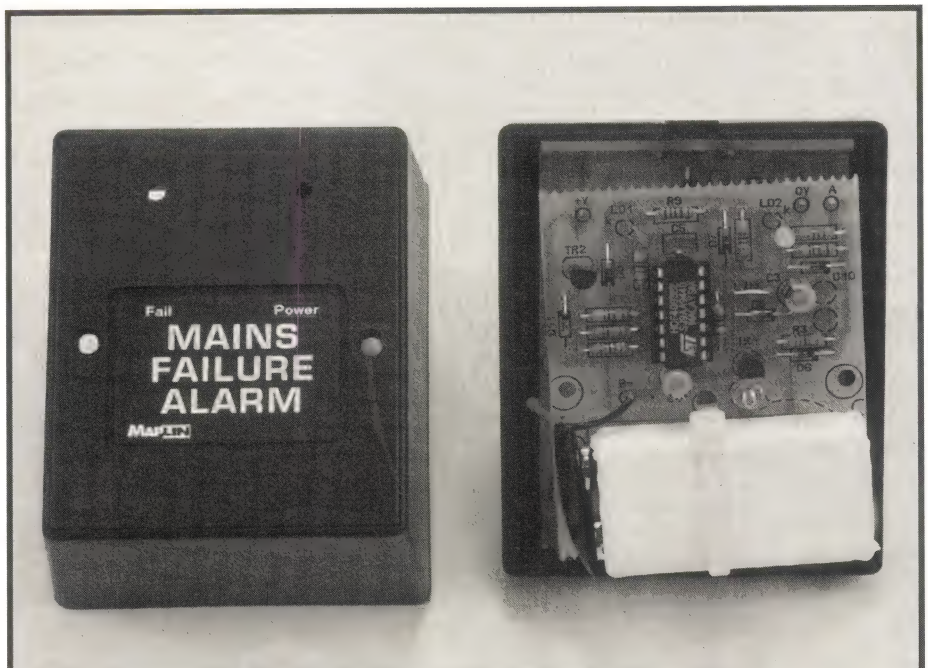

The two halves of the Mains Failure Alarm casing before final assembly.

respective holes in the lower PCB. Position the lower PCB in place on the screws, and fit a 15mm insulated spacer to each screw. Solder the Live and Neutral leads to the appropriate PCB pins on the lower PCB.

Next, fit the blanking PCB down the edge of the bottom PCB to fill the box cut-out aperture; fix in place with 'solder fillets' between the elongated pads and the PCB pins. Now fit the upper PCB above the lower one (component side up) whilst feeding the three wires (+V, 0V, A) through the holes marked the same on the upper PCB; fit the modified spacers to hold the assembly together. The three wire links are then soldered to the upper PCB by reaching in the ample space that exists between the two boards. Connect the battery positive (red) lead to the B+ terminal on the lower PCB. Fit and secure the (charged) Ni-Cd PP3 battery in place using a cable tie passed through holes in the PCB, then fit the battery clip to its terminals.

Testing

With a charged Ni-Cd battery fitted, and fuse F1 fitted into its clips. Press the ON/OFF switch, S1, next to the Earth pin – only the 'Fail' LED should flash in time with the bleeping sound. If all is well so far, and before going any further, fit the lid of the enclosure and secure it in place using the M3 countersunk screws; CAUTION, do not overtighten the screws.

Switch on the 13A outlet socket, then plug in the Mains Failure Alarm, whereupon the 'Power' LED should illuminate. Switch off the 13A socket; the 'Fail' LED should flash and the sounder bleep. Switch on the 13A outlet supply again, and the sounder should then be muted, however, the 'Fail' LED should continue flashing until reset by unplugging the unit. The Mains Failure Alarm is now ready for use.

MAINS FAILURE ALARM PARTS LIST

RESISTORS: All 0·6W 1% Metal Film (Unless specified)			
R1	1M 2W Metal Film	1	(D1M)
R2,6,8,10	47k	4	(M47K)
R3	1k	1	(M1K)
R4	470Ω	1	(M470R)
R5	15k	1	(M15K)
R7	470k	1	(M470K)
R9	1k5	1	(M1K5)
R11	4k7	1	(M4K7)
CAPACITORS			
C1	100nF 16V Ceramic Disc	1	(YR75S)
C2,4	10µF 50V Radial Electrolytic	2	(FF04E)
C3	1µF 100V Radial Electrolytic	1	(FF01B)
C5	4n7F Mylar Film	1	(WW17T)
SEMICONDUCTORS			
D1-4	1N4004	4	(QL76H)
D5-11	1N4148	7	(QL80B)
ZD1	BZY88C 12V Zener	1	(QH16S)
LD1	Red 3mm Low Current LED	1	(CZ28F)
LD2	Green 3mm Low Current LED	1	(CZ30H)
IC1	4093BE	1	(QW53H)
TR1	MPSA14	1	(QH60Q)
TR2	BC558	1	(QQ17T)
MISCELLANEOUS			
S1	Tactile PCB-mounting Switch Type 105B	1	(KR90X)
	14-pin DIL Socket	1	(BL18U)
	R-C Network Contact Suppressor	1	(YR90X)
	20mm Fuse Clip Type 2	2	(KU27E)
	50mA 20mm Quickblow Fuse	1	(WR93R)
	Large PSU Box with Integral Mains Plug	1	(YU31J)
	Very Low Profile Piezo Sounder	1	(KU57M)
	Single-ended PCB Pin 1mm (0·04in.)	1 Pkt	(FL24B)
	PP3 120mAh Ni-Cd	1	(AG33L)
	PP3 Battery Clip	1	(HF28F)
	M3 × 10mm Pozidrive Screw	1 Pkt	(LR57M)
	4BA Nylon Washer	1 Pkt	(BF83E)
	M2·5 × 10mm Steel Screw	1 Pkt	(JY30H)
	M2·5 Steel Nut	1 Pkt	(JD62S)
	M2·5 Shakeproof Washer	1 Pkt	(BF45Y)
	M3 Steel Nut	1 Pkt	(JD61R)
	M3 × 20mm Steel Screw	1 Pkt	(JY25C)
	M3 × 20mm Insulated Spacer	1 Pkt	(FS38R)
	0·71mm 22swg Tinned Copper Wire	1 Reel	(BL14Q)
	142mm Self-locking Cable Tie	1	(BF92A)
	PCB	1	(90048)
	Front Panel Label	1	(90049)
	Instruction Leaflet	1	(XV70M)
	Constructors' Guide	1	(XH79L)

The Maplin 'Get-You-Working' Service is available for this project, see Constructors' Guide or current Maplin Catalogue for details.

The above items are available as a kit, which offers a saving over buying the parts separately.

Order As 90047 (Mains Failure Alarm) Price £19.99

Please Note: Where 'package' quantities are stated in the Parts List (e.g., packet, strip, reel, etc.), the exact quantity required to build the project will be supplied in the kit.

The following new items (which are included in the kit) is also available separately, but is not shown in the 1996 Maplin Catalogue

Mains Failure Alarm PCB **Order As 90048 Price £3.29**

Mains Failure Alarm Front Panel Label

Order As 90049 Price £1.99

A readers' forum for your views and comments. If you would like to contribute, please address your replies to:

The Editor, Electronics – The Maplin Magazine P.O. Box 3, Rayleigh, Essex SS6 8LR, or send an e-mail to: AYV@maplin.demon.co.uk

AIR YOUR VIEWS

Dear Editor

Filter Out the Filter?

I would like to suggest a slight modification to the reverse supply polarity protection of your CW Filter (*Electronics*, September 1995, page 50). The existing circuit will dissipate about 6W in R1, ten times the rated power, if the 12V supply is reversed. This can be avoided by removing resistor R1 and moving diode D1 into R1's place. What's half a volt between friends?
P.S. I shall be round your Milton Keynes shop first thing in the morning to buy a Farmyard Sound Generator – no home should be without one!
Tim Hunt, tim@drutt.demon.co.uk

The resistor R1 is used in combination with C3 to provide supply filtering for the circuit, to reduce the possibility of noise being picked up and amplified – highly undesirable in a radio receiver. If these components are removed or repositioned, this filtering action also disappears, so it is an unrecommended alteration. The circuit is intended to be installed into existing radio equipment – once installed correctly, there would not be much likelihood of it being subjected to a reversed polarity supply. R1 also acts as an `electronic fuse' in the event of reversed polarity, and this would blow, rather than the IC, due to D1 bypassing the reversed current into this resistor – after all, it's cheaper to replace the resistor than the IC! I hope that you find the Farmyard Sound Generator project satisfies your requirements. Oink, Oink!

STAR LETTER

In this issue, Ian Berry, from Worsley in Manchester, wins the Star Letter Award of a Maplin £5 Gift Token, for his two-tone letter.

£5 Gift Token

Follow the Sine!

Dear Editor,
I am an electronics/computer programmer amateur enthusiast, and have just started buying your magazine. I must say, I'm delighted with its content. Very often when I'm designing my own circuits or writing my own software, I am faced with a problem that cannot readily be tackled without the need to empty my wallet at the local book stores or travel some distance to the local library, only to find stone-age books that are only of use to historians – this causes much frustration. Some unanswered questions that I have are:
1. How can you use a mouse in your own QBASIC programs – address (H3F8)?
2. What is the cheapest method of obtaining a stable 100Hz sinewave?
3. Can you name the best microcontroller that can be programmed in BASIC?
Darren Logan, Milton, Cambridge.

Thank you for your opinion on the magazine. Perhaps knowledgeable readers will be able to answer your questions – letters will be forwarded. With regard to your second question, the cheapest method would probably be to use a Wien bridge oscillator – one operational amplifier and a handful of R's and C's – even those stone-age library books should be able to provide a circuit for one, since this design has been around for a while now! There is also the ICL8038CCPD Waveform Generator IC – Stock Code YH38R – which can provide sine, square,

Dear Sir,
There seems to have been a certain amount of interest in the remote control by telephone project in issue 92. At least two letters have been printed making mention of it, which probably means one or two more which did not reach the presses. The latest letter in issue 94 reiterates the problem of only one control channel and the supposed uncertainty of whether the control has been received at all. There would be no problem with this last – the design of the unit appears such that this has been fully taken into account. However, the problem of several control functions without actual connection to the telephone line still remains. What is required is an automatic method of answering the telephone, accepting the control commands, and replacing the receiver – all without a direct connection. Such a system already exists – the humble answering machine. Most of these machines will let you listen to the caller on an internal loudspeaker as they are recording messages, as part of the call-screening function. Now all we require is a method of generating and receiving control tones, DTMF being the obvious answer. The transmit part of the chain is easy – in fact, if the call is made from a telephone with DTMF dialling, just pressing the buttons will do the job. An external tone pad, such as Maplin's ZB19V or CK25C, will do the job just as well. The decoding at the other end is a little more complex, but there are dedicated chips to do this. One such is the MC14LC5436P from Motorola, which will decode the dual tones, present them in the form of four BCD outputs, and generate a strobe pulse to clock a latch. A bare-bones circuit is included, with an add-on latch circuit and an add-on decimal decoder if required. A small electret microphone insert and a bit of a preamplifier complete the setup. This is a very simple application, and there is much room for refinement. For example, it could be possible to give confirmation of actions carried out. This last would depend on the functions offered by the answering machine. This system does work; it is currently in use to operate a remote 8-input video switcher down a single audio cable, the only modification to the original circuit was the separation of the optional latch and decimal decoder parts, and the microphone amplifier, which replaced the original line level transformer input. Now, as to getting your hands on the DTMF chip; they are available from Macro Marketing Ltd., Tel: (01628) 604383, or we can all gang up on Maplin and persuade them to stock it!
Ian Berry, Worsley, Manchester.

Thank you for your letter, suggestions and circuit diagram for your design of DTMF Tone Decoder. Unfortunately, this type of system still involves the imposition of a charge for the phone call in order to transmit the control command – the Call Code Switch project activates devices with no call charge to pay whatsoever!

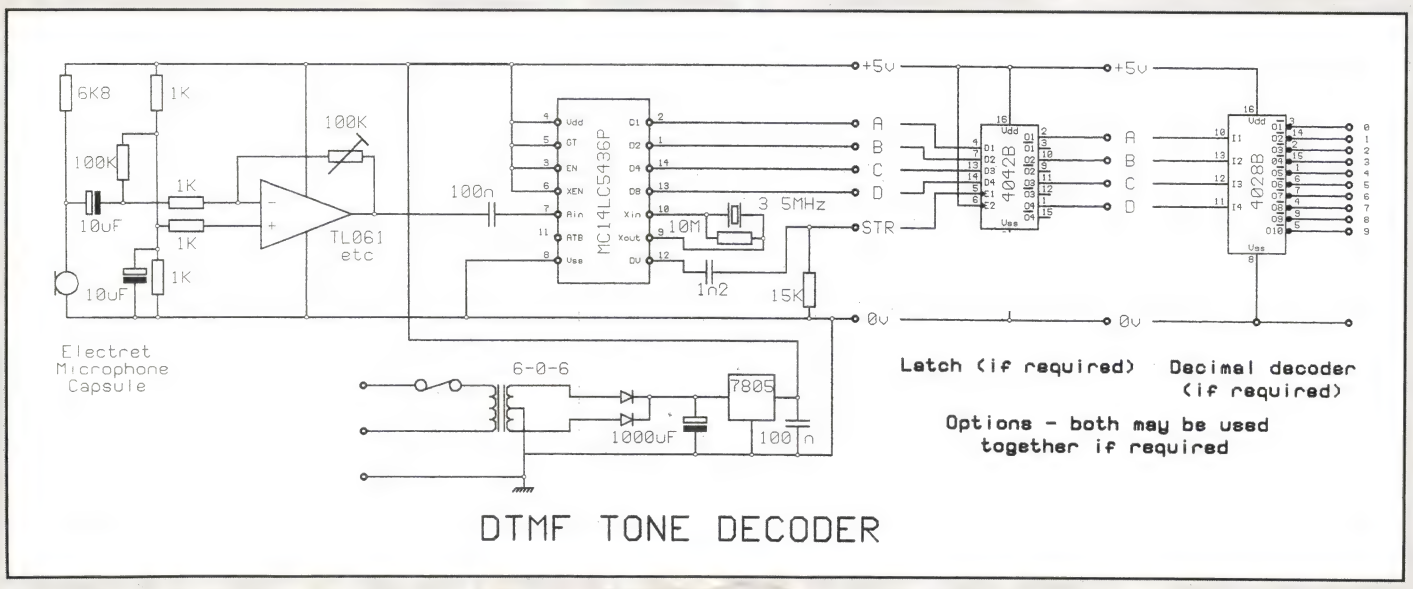

triangular, sawtooth and pulse waveforms of high accuracy and stability across the frequency range 0·001Hz to 1MHz – an application circuit is provided in the Catalogue, see also the Low Cost Audio Waveform Generator project, Issue 48, which is based on the 8038 IC.

Self-regulating Time

Dear Editor,
Having become fed up with my PC being unable to keep accurate time, and having several clocks in the house, all of which tell different times, I am searching for a method to use my PC to set its internal clock to the correct time via a time signal of some kind. There are a couple of ideas which I have thought of, these being firstly, I thought I may be able to use your Rugby clock receiver project, but unfortunately, I have no spare slots in my PC, so I cannot use the I/O card which is recommended to be used with the kit. I was wondering if it is possible to convert the output of the Rugby clock receiver into an RS-232 signal that can be decoded by a PC or other computer (the RS-232 should be a true RS-232 signal, consisting of time, date, etc., rather than just high-level changes which the program has to decode, as I would like to use a high-level Windows language such as Visual Basic or Delphi, which have library functions to read the serial ports). My second idea was to use the time signal that is broadcast along with RDS information used for car radios and some Hi-Fi systems. Do you think you could create a kit which would pick up an FM radio signal, extract the time signal (and perhaps, other RDS data), and convert it into an RS-232 signal that could be decoded by a computer as explained above? As the RDS signals are a Europe-wide system, perhaps a travel clock or clock/radio would be a good idea for a kit, as the time would automatically change as you travel from country to country. The subject of RDS may also make for an interesting article. Many thanks for an excellent magazine.
Mr. M. Clark, Oldland Common, Bristol.

Maplin do stock a variety of clocks and modules which use the Rugby MSF time signal to maintain their accuracy, and which enable them to adjust themselves in accordance with the time zone that they are in. Examples of these are RJ88V, RJ89W, plus the Rugby clock kits you mention, the Micron III (LT03D), and Rugby Clock Receiver, LP70M. The subject of the Radio Data System (RDS) has in fact, been covered a couple of times already in Electronics, *see issues March-May 1988 (No. 26) and February 1993 (No. 62).*
Without knowing which type of PC you have, it is difficult for us to advise as to how to achieve additional expansion slot space, thus allowing an MSF clock card to be installed, although an external system could be attached to the expansion bus via ribbon cable, and an external DC power supply could be used to run the external card, as long as the 0V line of the PSU was linked to that of the PC. Alternatively, if you have access to the Internet, you could use available shareware that allows the PC's time clock to be updated by a Rugby MSF receiver – a suitable circuit design may be available from the same source.

Useful www Sites

Dear Sir,
Here are a few www sites that may be useful to *Electronics* readers: The World-wide Web Virtual Library: Electrical Engineering. An index of web sites for most of the larger electronics companies, at **http://epims1.gsfc.nasa.gov/engineering/ee.html#mfr**
Harris Semiconductors – data sheets. Data sheets in postscript format on their range of semiconductors (A/D, D/A, analogue switches, etc.), at **http://rel.semi. harris.com:80/docs/datasheets/**
IBM, at **http://www.ibm.com/**
Intel, at **http://www.intel.com/index.html**
Heriot-Watt University, Department of Computing & Electrical Engineering, at **http://www.cee.hw.ac.uk/index.html**
Scott Wade, Heriot-Watt University, Edinburgh, Scotland.

Dear Sir,
Why has it taken so long for there to be an article about sub-woofer bins?! The gap between this and the 150W PA system is far too long. And why the need to pay a huge amount for such a unit when all it is, is a box that's made to make the lower frequencies needed for Hi-Fi. Always, I am unconvinced when you hear tales from 'What Hi-Fi' magazines that the new Mission or new Tannoy is just the bees knees when it comes to bass. I call such units furniture pods: looks good, but a lot of nonsense in terms of flat response. And how come club PA systems are the complete opposite – looks rubbish (some sound rubbish), but are better overall? We have sent men to the moon, designed new animals, made war efficient, but as yet, we cannot get that last octave – 50 to 25Hz – absolutely flat. Maybe we should cut our losses, and have direct surgical implants: bypass the eardrum, and send the signal straight through to the nerves! And what about that new electro-mechanical foil I saw on the 6 o'clock news: it basically vibrated when a current was passed through it. The latest application was music balloons. Maybe a film of this stuff – applied wallpaper-like will do the job all the so-called Hi-Fi manufacturers have not done. And why is Maplin not doing enough for the planet, I simply . . . (only joking). On a final note, why is the article completely devoid of formulae? Why not do a complete `theory on resonators and speaker designs' article – and I hope a Maplin kit will be forthcoming!
V. Black, Stanley, County Durham.

Presumably you are referring to the series of articles, Designing & Building Subwoofer Systems, issues 73-76 and 150W MOSFET Amplifier, issue 41. The former articles were written by an outside author, the latter by a member of the Maplin team, which perhaps explains the duration between the two. The articles for constructing a set of your own sub-woofer bins would save you money compared to buying ready-built units; the cost would then depend on where you sourced the materials from, and the standard you build the speakers to; in theory, you could make them for next to nothing! The idea you have for using the electromechanical foil is novel, though would perhaps be expensive if one were to cover a wall in the stuff! We produced a feature in issue 61, entitled `How to use Piezo-electric Film' – presumably, this type of foil is similar/the same as the type you mention. Your suggested article subject has been noted, although this subject would take quite a few episodes to explain all the theory involved!

Dear Editor,
I'm 15 and have been interested in Electronics for a good 7 years. I would like to thank David Faulkner for his article in the June 1995 edition, entitled `Making Professional Quality PCBs'. It has encouraged me to buy an ultra-violet light box, or should I say UV box, and believe me, they are excellent, and I recommend them to anyone who enjoys making good, professional boards. In David's article, he says that the best results he achieved were when printing onto tracing paper using a bubble-jet printer. I've found that if you've got the PCB layout in a book or magazine (such as this one), you can use a modern powder-type photocopier to copy it onto tracing paper. You may find that you have to set the photocopier to it's darkest setting. Also, thanks for your wide range of projects, as I love building them, and I can't wait for my new catalogue to arrive through the post.
Thanks for a great magazine.
M. J. Doust, Tunbridge Wells, Kent.

Thank you for your enthusiastic comments, and good to hear that the article went down well with you. Your tip could be of interest to other DIY PCB'ers out there, but we advise caution when using a photocopy of a printed PCB layout, since some photocopiers produce a copy that differs slightly in size from the original – therefore, carefully measure the copy to ensure it is the correct size before going to all the effort of making up a PCB from it!

Dear Sir,
With reference to your very interesting article, `IBM PC Centronics Input Port', May 1994, in which programs can be sent between computers using the printer parallel port and IBM PC I/O Card (LP12N), using LLIST, commands, etc. I enclose comments on using various computer systems.
1. Amstrad 464 to IBM/compatible – works well using article connections.
2. BBC B to IBM – works well, provided we use pin 10 (_ACK) instead of pin 11 (BUSY).
3. IBM to IBM – (e.g., 5¼in. to 3½in. disks data) – works well, provided pin 12 = GND. (Some variants may require pins 13 and 32 connected to +5V via 4k7Ω resistor).
4. IBM to Z80 computer – works well with LP12N Card and an external +5V supply, provided we connect AEN/_IORQ/_IOR/_RD/_IOW/_WR and RESET pin to GND via 1kΩ and 1µF to +5V. E.g., 464 expansion address = &F800, &300, &200. Card-GND A2-A8, join A9/A10 (464), A1/A9, A0/A8 with card address = 00000000xx.
5. Z80 to Z80 computer – as 4.
6. Amstrad 8256 to IBM – (e.g., 3in. to 3½ in. disks data) – 8256 doesn't have a Centronics interface, and hence system doesn't work. Has the author or any of your readers any circuits for an 8256 Centronics or other interface? Alternatively, does a BASIC program exist which can send LIST to the IBM, using a non-standard interface?
7. It is useful for initial tests, to delete program disk lines and just use the IBM VDU, the system also works with IBM and Z80 BASIC and machine code versions of the program.
Ken Hughes, Wokingham, Berkshire.

Thank you for your comments and suggestions, which will be useful to those interested in getting the best out of the IBM PC Centronics Input Port project. If any readers can supply the information requested, please write in – letters will be forwarded to Mr. Hughes.

FOR BARGAINS AND MORE, VISIT YOUR LOCAL STORE

Belfast 357-359 Lisburn Road.
Birmingham Sutton New Road, Erdington.
Bradford 28 Valley Road, Ham Strasse.
Brighton 65 London Road.
Bristol 302 Gloucester Road, Horfield.
Cardiff 29-31 City Road, Roath.
Chatham 2 Luton Road.
Cheetham Hill 169 Cheetham Hill Road, Cheetham Hill.
Coventry 12 Bishop Street.
Dudley Unit 7, Sterling Park, Pedmore Road, Brierley Hill.
Edgware 146-148 Burnt Oak, Broadway.
Edinburgh 126 Dalry Road, Dalry.
Forest Hill 107-113 Stanstead Road.
Glasgow 264-266 Great Western Road.
Hammersmith 120-122 King Street.
Ilford 302-304 Green Lane.
Leeds Carpet World Building, 3 Regent Street.
Leicester Office World Building, Burton Street.
Liverpool Edge Lane, Fairfield.
Manchester 8 Oxford Road.
Middlesbrough Unit 1, The Forbes Building, 309-321 Linthorpe Road.
Milton Keynes Unit 2, Office World Building, Snowdon Drive, Winterhill.
Newcastle-upon-Tyne Unit 4, Allison Court, (The Metro Centre) Gateshead.
Northampton 139 St. James Road.
Nottingham 86-88 Lower Parliament Street.
Portsmouth 98-100 Kingston Road.
Preston Unit 1, Corporation Street.
Reading 129-131 Oxford Road.
Sheffield 413 Langsett Road, Hillsborough.
Slough 216-218 Farnham Road.
Southampton 46-48 Bevois Valley Road.
Southend-on-Sea 282-284 London Road.
Stockport 259-261 Wellington Road South.
Stoke-on-Trent 39-45 London Road.
Ring 01702 552911 for further details.

MAPLIN STORES NATIONWIDE

CAR HEADLIGHTS DELAY

1 PROJECT RATING

KIT AVAILABLE (90083) PRICE £9.99

The project presented here is such a useful accessory, that you will wonder how you ever managed without! The purpose of the unit is to switch on your vehicle's headlamps for a preset delay period on exiting the vehicle, so that when you arrive at your destination in the dark, you will be able to see your way quickly and safely.

Design by Alan Williamson
Text by Maurice Hunt and Alan Williamson

THE project is compact, easy to build and simple to install, and uses components specifically designed for automotive applications, for maximum dependability. Correctly installed, the circuit will not interfere with the normal operation of the vehicle headlamps, and the delay will only be activated if you want it to, by flicking the headlamp flash stalk or switch as you exit the vehicle. The preset delay period is adjustable, to enable you to set the headlamps on period to suit the illumination time you need. Turning on the vehicle ignition, or flicking the headlamp flash switch twice in succession, will immediately reset the circuit, and deactivate the delay action.

Circuit Description

Refer to Figures 1 and 2, of the block and circuit diagrams, respectively.

FEATURES

- ★ Compact and easy to install
- ★ Adjustable delay period
- ★ Low current consumption
- ★ Uses automotive application-specific components
- ★ Active high and low inputs

APPLICATIONS

- ★ Cars, vans, trucks using 12V electrics
- ★ Suitable for negative and positive-earthed vehicles

Darlington-pair transistor, TR1, is the power supply switch, which is biased on by R2. When the ignition is on, the circuit is powered down, this being accomplished by the 'jamming' supply voltage to the base of TR1, via the ignition input (IGN) being high.

IC1 is a long-duration timer, specifically designed for automotive applications. RV1, R7 and C3 determine the internal oscillator

Specification

Supply voltage (nominal):	12V
Maximum operating voltage:	16V
Operating current:	30mA @ 12V
Quiescent current:	2·5mA @ 12V
Circuit protection:	10A and 100mA time-delay fuses, reverse-polarity protection
PCB dimensions:	69 × 52·5mm
Maximum board height:	24mm

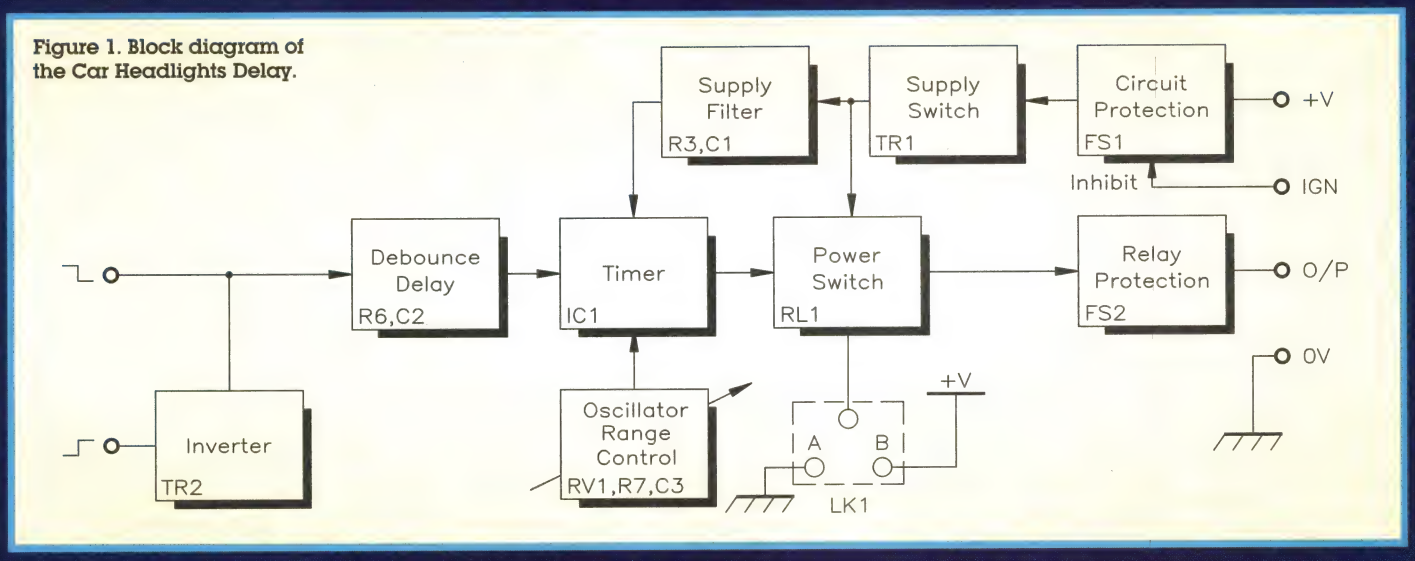

Figure 1. Block diagram of the Car Headlights Delay.

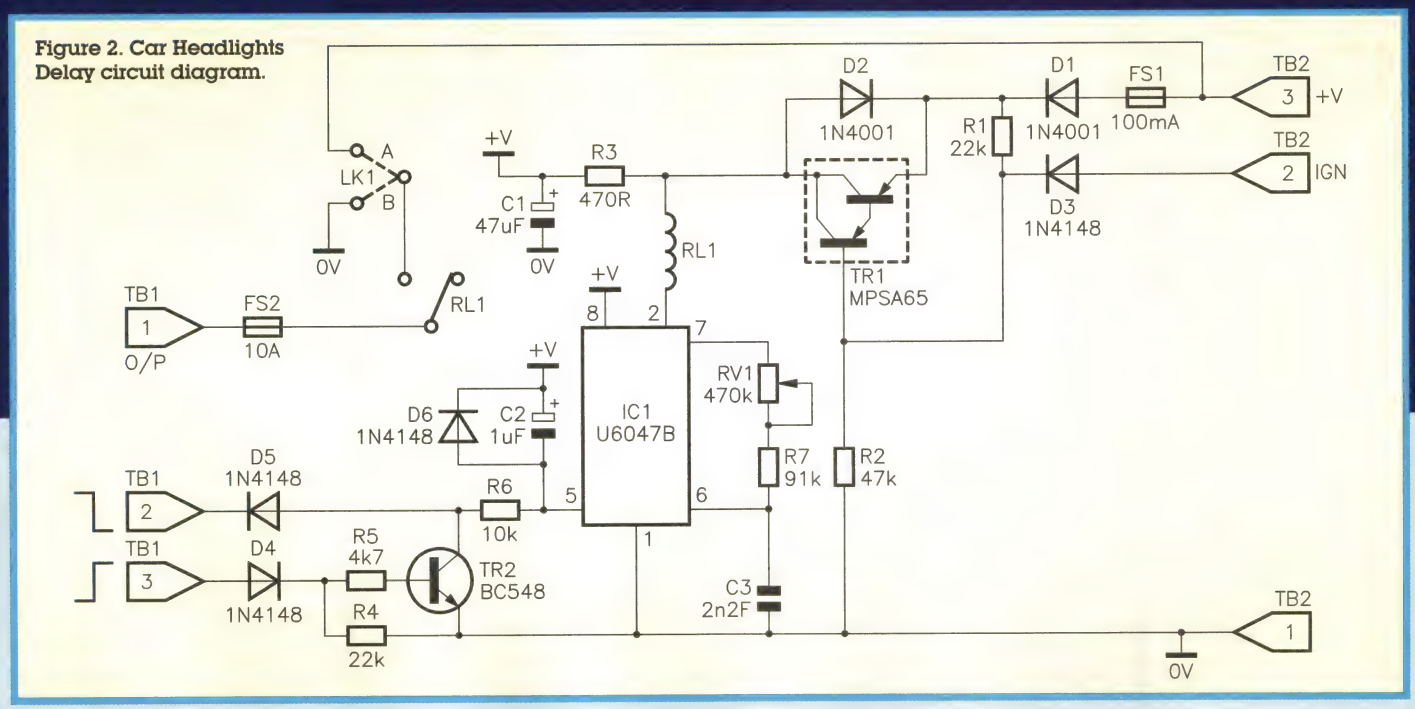

Figure 2. Car Headlights Delay circuit diagram.

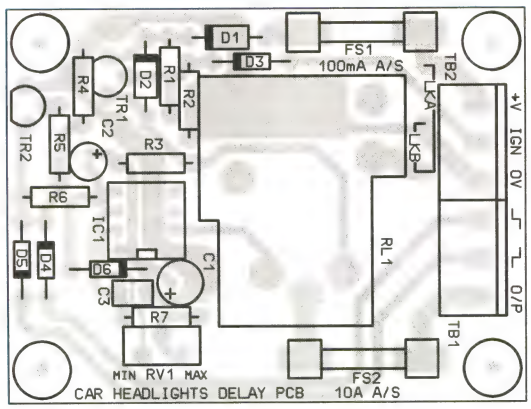

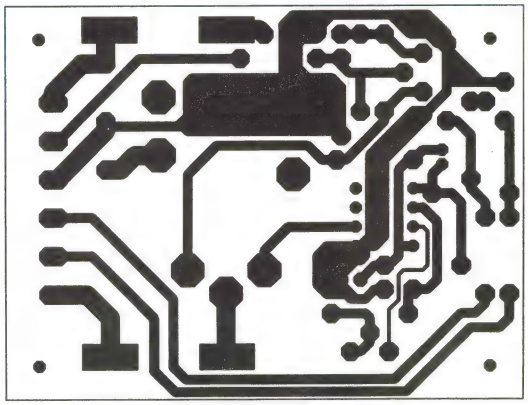

Figure 3. PCB legend and track.

frequency (f_o), and consequently, the input debounce and output duration time, in this case, from between approximately 15 seconds (with RV1 at minimum resistance) to 60 seconds (with RV1 at maximum resistance).

IC1 is activated by grounding the toggle input (pin 5), achievable by either an active low input on the terminal marked (⊓⊔) on the PCB, or an active high input on the terminal marked (⊔⊓); transistor TR2 provides the inverter stage to enable this. The input debounce time will be a maximum of 10ms, which would be sufficient for relatively new vehicle switches. Older, dirtier switches' unclean action may cause the output of IC1 to be toggled. By including the time constant provided by R6 and C2, this situation is avoided.

Relay RL1 is also specifically designed for automotive use, and is sufficiently robust to be able to cope with the high instantaneous current drawn by halogen headlamps at switch-on. The delay period is calculated in accordance with the formulae below:

$$\text{Debounce time} = 6 \times \frac{1}{f_o}$$

$$\text{Delay time} = 73{,}728 \times \frac{1}{f_o}$$

$$f_o = \frac{1}{(t_1 + t_2)}$$

$$t_1 = R_{osc} \times C_{osc} \times f_1$$

$$t_2 = 500 \times C_{osc} \times f_2$$

With $f_1 = 0{\cdot}833$ and $f_2 = 1{\cdot}551$ C_{osc} = 470pF to 10nF

and $f_1 = 0{\cdot}746$ and f_2 $1{\cdot}284$ for C_{osc} = 10pF to 4μF

Where:
C_{osc} = C3
R_{osc} = RV1 + R8

Figure 4. Front panel label.

The '500' in the t_2 formula is the value of the internal discharge resistor.
Minimum oscillator frequency = 1Hz
Maximum oscillator frequency = 40kHz
Minimum oscillator input current = 1μA

The circuit design is such that, if a second high level is applied to the 'IGN' terminal (i.e. caused by flicking the headlamp flash switch twice in succession with the ignition off), then the output is reset, thus causing the headlamps to be turned off. This is provided so that, when accidentally triggered, the headlamps will be turned off again.

PCB Construction

First of all, the vehicle's electrical system needs to be looked at. If you have a proper servicing manual, or owners manual that shows the wiring diagram, it will be possible to check if the headlights are switched to supply or ground (usually via a relay). Otherwise, you will have to use a multimeter or test lamp, and investigate on the vehicle itself to establish the particular wiring arrangement in use.

If the relay powering the headlights is switched to supply (assuming the vehicle is negative earthed), link A should be fitted; if switching to ground, fit link B.

Construction of the unit is straightforward, and reference to Figure 3, showing the PCB legend and track, will assist the process; begin fitting the smallest components first, progressing in size to the largest. Use the lead offcut of one of the 1N4001 diodes (D1/D2) for link A or B, since these components have thicker leads than the others. Fit the two 3-way terminal blocks together before installing them to the PCB. To aid alignment, fit the fuse clips to the fuses prior to inserting them into the board. Ensure that the IC socket is correctly positioned in accordance with the PCB legend.

Take care to correctly orientate the polarised devices, i.e. electrolytic capacitors, diodes, transistors and the IC – the latter should be inserted into its socket last of all. Thoroughly check your work for misplaced components, solder whiskers, bridges and dry joints. Finally, clean the flux residue off the PCB using a suitable solvent.

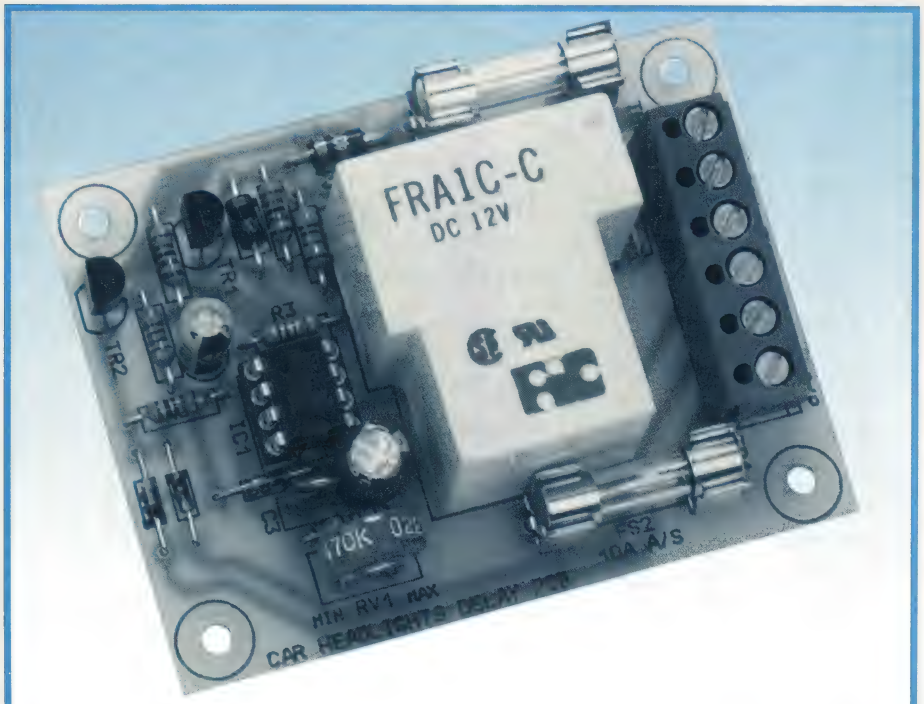

The assembled PCB.

Testing

Initially adjust potentiometer RV1 fully anticlockwise. Connect a 12V DC supply to the +V and 0V terminals; the relay should not operate, if any components overheat, for any reason, switch off immediately, and recheck your PCB assembly work! Connect a lead from the +V supply terminal and briefly connect it to the supply switch input (⊔) to trigger the module, and energise the relay – a click will be heard as this happens. Approximately 15 seconds will elapse before the relay de-energises (indicated by another click).

Readjust RV1 to maximum (fully clockwise), then repeat the test. The relay will energise again; quickly reconnect the lead to the supply

switch input, and the relay should de-energise immediately. Retrigger the module, but this time connect the lead between the +V supply terminal to the 'IGN' terminal, whereupon the relay should again immediately de-energise. The module has now been fully tested, and can be fitted into the (optional) box, prior to installation into a vehicle.

Box Construction

The front panel label for the box is given in Figure 4. Prior to sticking it in place, drill the box as shown in the drilling diagram of Figure 5, remembering to drill the small hole in the side of the case to allow access of a screwdriver to the potentiometer, thus enabling the delay period to be easily adjusted. Use a rubber grommet on the large hole that the interconnecting cables pass through, to prevent them chafing on the hole edges.

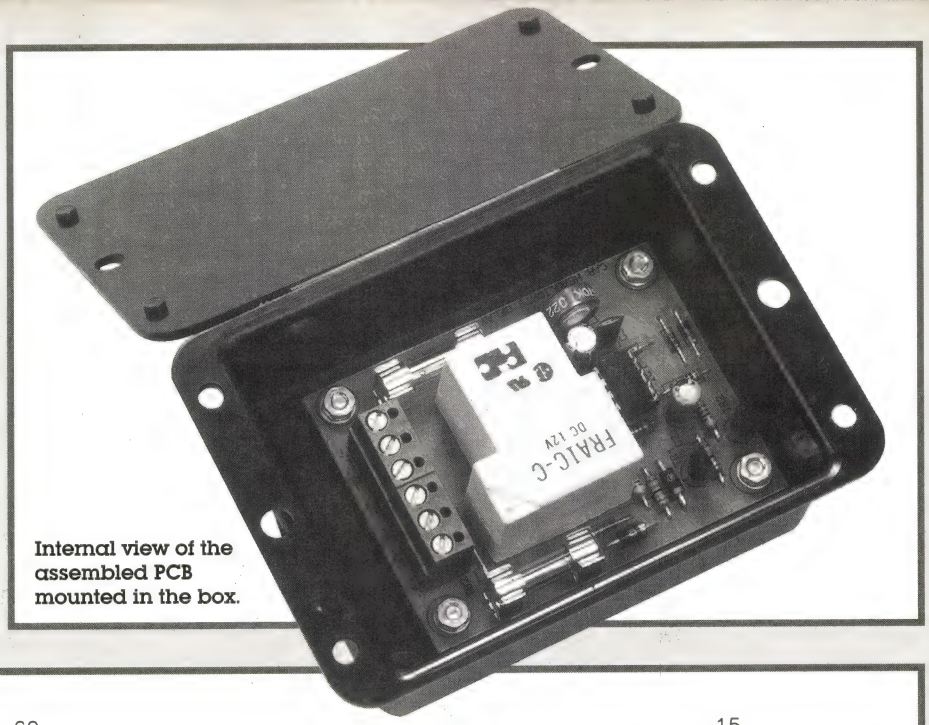

Internal view of the assembled PCB mounted in the box.

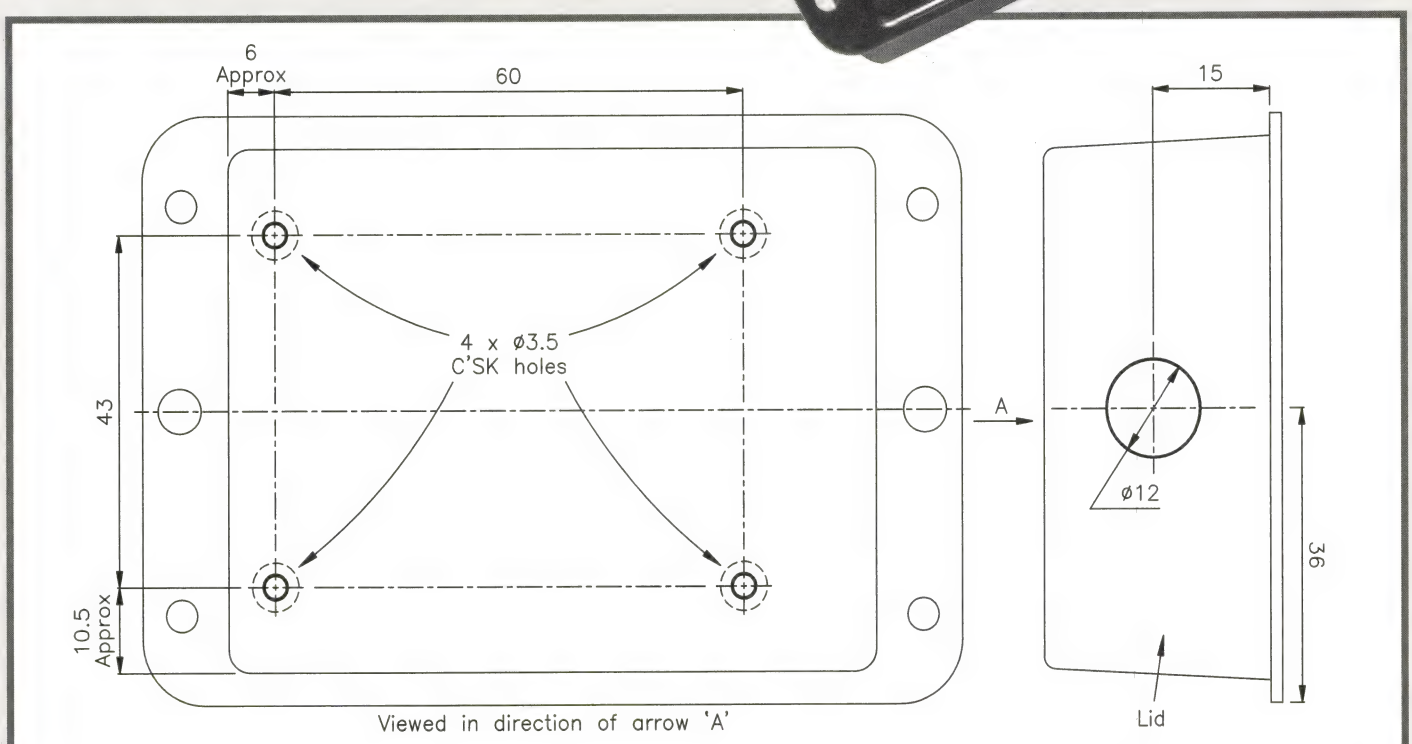

Figure 5. Box drilling diagram.

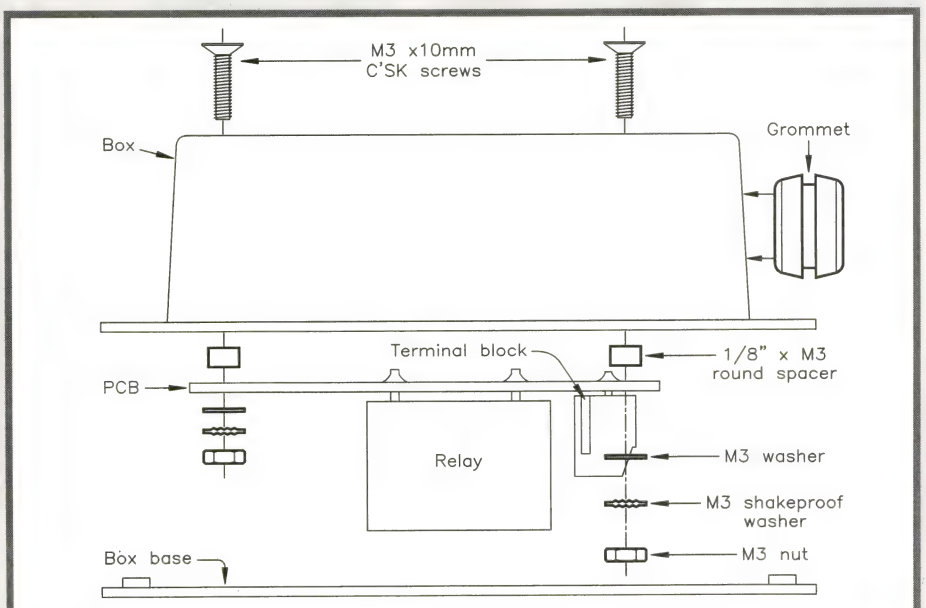

Figure 6. Exploded assembly drawing.

Install the PCB as indicated by the exploded assembly diagram shown in Figure 6; pass the four screws through their holes, and hold them in place against a flat surface (or the palm of your hand), while you put the spacers over the screw threads from inside the box, followed by the PCB (with terminal blocks facing the large hole/grommet, then flat washers, shakeproof washers and finally, the nuts – don't overtighten, otherwise the PCB may crack. You may find it easier to attach the interconnecting leads, presuming they are long enough, to the terminal blocks, having first passed them through the grommetted hole, before bolting the PCB into the box. Finally, wipe the surface of the box clean, and apply the front panel.

Installation

It is essential to remove the appropriate fuse(s) in the vehicle, or to disconnect the vehicle's battery (consult the vehicle handbook if electronic engine management is fitted) before attempting to install this unit. Refer to Figure 7, which provides the wiring and typical installation diagrams. The unit should be mounted in a position where it will not be subjected to extremes of temperature and water ingress; beneath the dashboard, or on the inside of the vehicle's bulkhead are good places to fit it. It is advisable to use the specified plastic box to house the circuit.

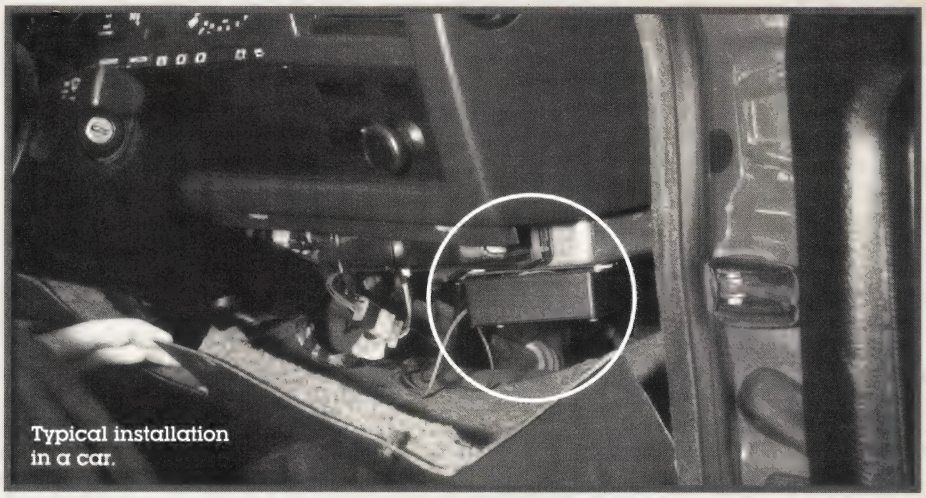

Typical installation in a car.

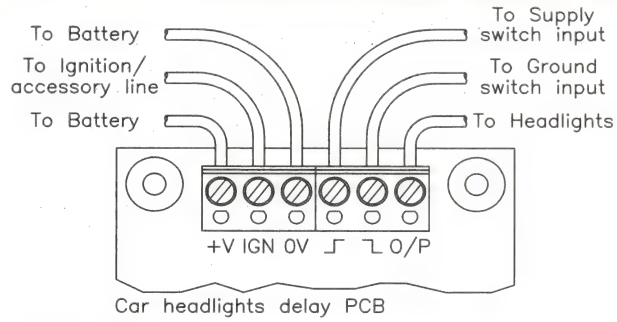

Figure 7a. Wiring diagram.

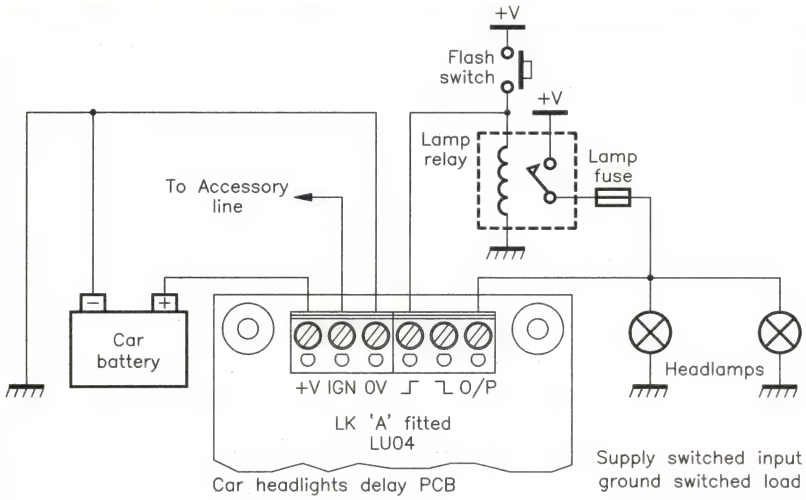

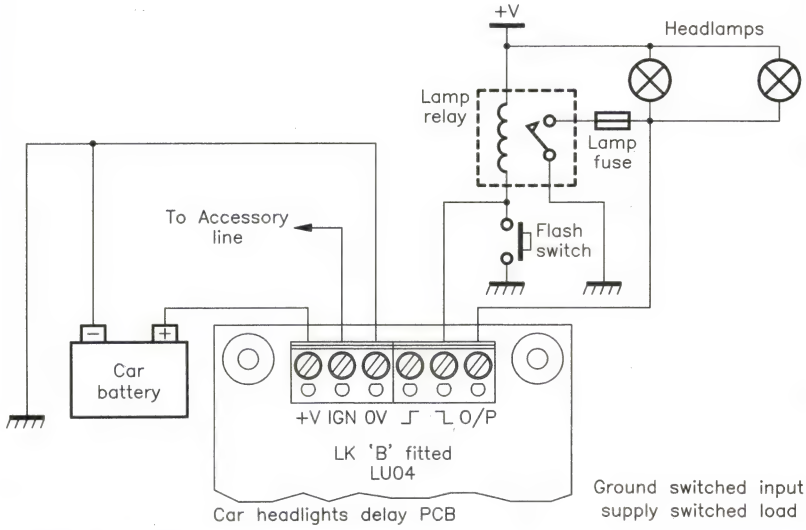

Figure 7b. Typical installation diagram.

For the interconnecting leads, use cables with a suitable current-handling rating (10A minimum), particularly for the cables that connect to the headlamps and power supply lines. Where cables pass through panels and/or the bulkhead, it is essential to use rubber grommets to prevent the wires from chafing through on the sharp edges, since this could result in a fire or damage to the vehicle's wiring. Ensure that the interconnecting cables are long enough to enable the convenient fitting of the unit, but not so long that they drop down onto the vehicle's foot pedals, controls, etc., which could be hazardous.

If you need to break into the vehicle's existing wiring at any point, use the correct type of crimped connectors designed for this job, rather than simply twisting wires together and taping them up, which is likely to result (sooner or later) in an unreliable connection. Hopefully, you will not need to break into the existing wiring – by careful study of the vehicle wiring diagram, you should be able to locate the relevant termination/junction points, and connect at these points, for an easier and neater installation.

An in-line fuse will not be required for this unit, since the fuses are incorporated on the board, which protect both the headlamp circuit and the board from overload currents.

Using the Car Headlights Delay

On leaving the vehicle (having turned off the ignition and before locking up!), if you want to have your intended path bathed in a flood of halogen light, courtesy of the headlamps, simply flick the headlamp flash switch once, which triggers off the delay. Lock up the vehicle as usual, and proceed on your way, whereupon following the preset delay period, the lights will automatically be turned off, by which time, you should be indoors!

If you activate the headlamps delay by error, flicking the headlamps flasher switch a second time will immediately switch the lights off again.

Continued on page 63.

by Richard Wentk

The ART of Electronic Music

Part 4 – The Future

The holy grail of music synthesis has always been the accurate reproduction of acoustic instruments. From this point of view, all past and present electronic musical instruments are something of a disappointment. Traditional oscillator/filter analogue synthesis is the worst offender here. Analogue string and brass sounds are passable, if not exactly convincing, simulations of the real thing, but attempts to copy the sounds of other instruments leave a lot to be desired.

DIGITAL approaches are much better, but these also have their limitations. Sampling is perfect for the relatively undemanding world of chart music. Here, sampled sounds slot comfortably into complicated mixes which are so busy, that their wooden feel remains well-masked. With drum sounds, the illusion can be near-perfect, but with more complicated sounds such as saxophone or piano, careful listening reveals that the tone and articulation aren't quite convincing. Heard on its own, it becomes very obvious indeed, just how much a sampled simulation lacks the richness and depth of a real instrument.

The reasons why acoustic instruments are so hard to copy are very revealing. Firstly, there's the level of detailed acoustic sounds offered to the listener. In a piano, for example, the individual notes play only a part of the total sound. The rest of the sound is created by resonances between the strings. A grand piano has an 88-note keyboard, and most of the notes use three strings to make their sound. This means that with the damper pedal raised, there are hundreds of strings all contributing to the final effect – as well as the mechanical resonances in the soundboard, the wooden frame, the lid, and so on. The total effect is one of a very organised randomness. Some similar effects occur in all other acoustic instruments (see Figure 1).

Secondly, there are the minor physical imperfections that all instruments suffer from. Taking the piano as an example again, not only are there hundreds of strings, but they are all tuned very slightly differently. Similarly, a brass instrument may have slight dents and a few scratches, all of which contribute slightly to its overall tone.

One current attempt to recreate these effects is known as physical modelling (PM). PM synthesis attempts to accurately model the exact physical processes that create a sound. By abstracting the mechanical details of the sound generating process, it is possible to create a mathematical simulation that can sound remarkably convincing. Unlike cruder synthesis techniques, the model retains the articulation and expressiveness of the real thing. Flute players for example, can create a shrill effect by blowing harder than usual – this causes the tube of the flute to ring in a more complex way at one of the harmonics of the resonant frequency. This kind of effect is difficult to achieve using conventional synthesis.

It turns out that, computationally, physical modelling is relatively straightforward. The mathematical models used are very simple, but give rich results. Most physical modelling is based on the use of delay lines, which here are used to model waveguides, such as Figure 2. The delays can be tapped at different points along their length, and 'reflections' can be set up at either or both ends. By adding feedback, phase shifts and various kinds of filtering, it is possible to model the resonances and other performance characteristics of a real instrument. The waveguide is driven with a 'driver' function, which simulates the initial input of the player – blowing a reed, scraping a string, and so on. The sound 'bounces' up and down the waveguide and decays much like a real sound would, because losses are introduced between the elements of the delay line to simulate real-world damping effects. The theory is translated into a practical instrument with musically intelligible properties, Figure 3 illustrates this method.

Commercial instruments offer the user a range of preprogrammed sound models to choose from. The details of the physical modelling system are kept hidden from the user, because it turns out to be far too easy to turn a sound that almost works into a chaotic mess, simply by tweaking one parameter by a tiny amount. Hence, only 'tame' parameters are available for user control. Figure 4 depicts a clarinet, and shows how physical modelling of a real instrument's operation is translated into synthesized equivalents. These include the parameters for varying the pressures, air column length, and so on, as would be applied to the instrument. This makes commercial modelling instruments more preset than most. However, they still have the advantage of being far more expressive, and played with a suitable musical technique, can give very impressive results indeed.

An interesting side-effect of physical modelling has been the incentive it has given into research about why instruments sound exactly as they do. For example, a bow stroke on a violin turns out to be a surprisingly complex process. The bow alternatively slips and scrapes across the string, and depending on the pressure of the stroke, the result is either a steady slip/scrape/slip/scrape oscillation, or a chaotic (but not necessarily unpredictable) random rasp, Figure 5 shows these effects. The results of detailed research like this give a much clearer understanding of why instruments sound the way they do. In addition to the details of the bow stroke – which will depend on the materials used for the bow and strings, and also how hard it has been rosined – it has become clear that the sound of the violin depends on the shape of the resonator, the wood used, its thickness, the elasticity of the glue, and even the mechanical properties of the varnish.

The other approach that is

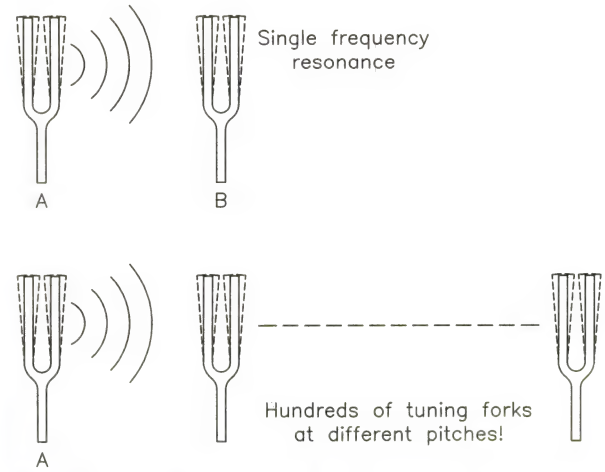

Figure 1. The strings in a piano act like hundreds of tuning forks, creating a very complicated and pleasing resonance effect.

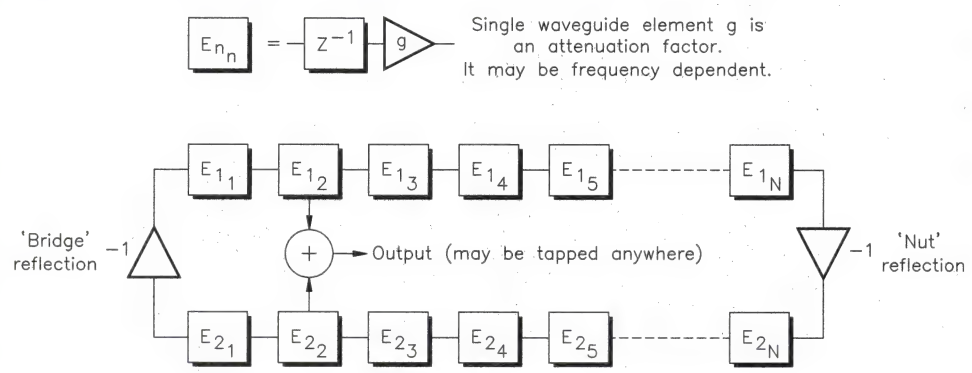

Figure 2. A physical modelling two-part waveguide. The –1 factors act as reflectors. Each element in the waveguide is a single delay term coupled to an attenuator. Complex models use frequency dependent attenuation.

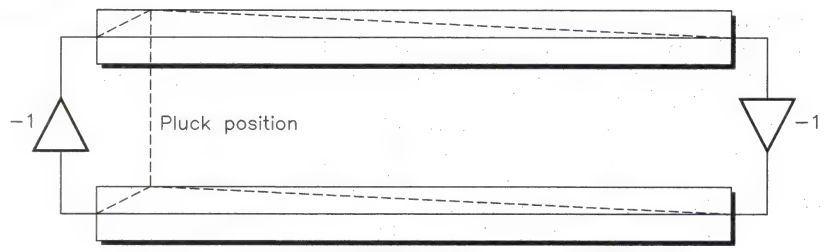

Figure 3. To simulate a plucked string, the physical equivalent to a set of plucked string displacements is copied into the string. Then the delay can recreate the reflected damping effects.

currently being taken, is based on real-time Fourier resynthesis. In Part 1 of this series, we looked at how any sound can be broken down into a set of constituent frequencies in much the same way that light passing through a prism can be broken down into colours. Practical Fourier synthesis uses this effect as the basis for completely new kinds of sound manipulation and creation. It also turns out to be a good way of compressing the amount of information needed to characterise a sound.

The first step in Fourier synthesis is to analyse the sound. For pitched sounds, the ideal is to extract the fundamental and then use this as the centre frequency of the analysis. This gives the best results, but also leads to a loss of generality. For non-pitched or otherwise more complex sounds, an arbitrary analysis frequency is chosen and the data is divided into sample frames and then 'windowed' (faded in and out at the frame boundaries), refer to Figure 6. Without this windowing, there would be discontinuities at the frame boundaries, and these would add spurious harmonics to the result. Frames may also be overlapped.

Each of these frames is then analysed to give the list of harmonics present. The result is a complete definition of all the frequency and phase information needed to recreate the waveform in the sample frame, as Figure 7 shows – this is the core of the analysis/resynthesis process. It is a useful artifact of the analysis process, that a frame of analysed data takes up exactly the same amount of memory as its original audio samples.

The frame rate determines the level of detail within the sound. A typical musical instrument might need a few tens of frames to capture the detail at the start of a note, but only a few frames a second once the sound has reached more of a steady state, as illustrated in Figure 8. More complex sounds, such as a snatch of music, need a consistently higher frame rate to give accurate results, otherwise the sound becomes smeared and slurred – an interesting effect in itself, but one that is better created deliberately rather than by accident.

The stream of frames can then be analysed, and various kinds of data compression algorithm applied. Of course, the act of using a low frame rate compresses the data significantly anyway, see Figure 9. The data can also be compressed using the frequency masking principle – sufficiently quiet frequencies can

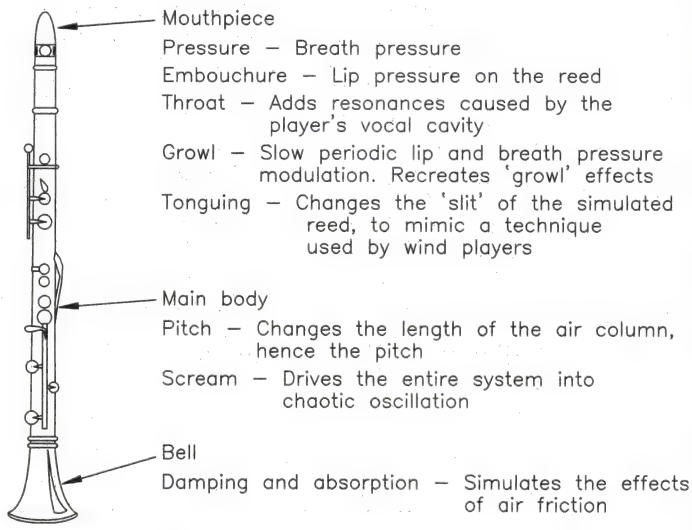

Figure 4. A physical modelling instrument includes access to a range of musically meaningful parameters.

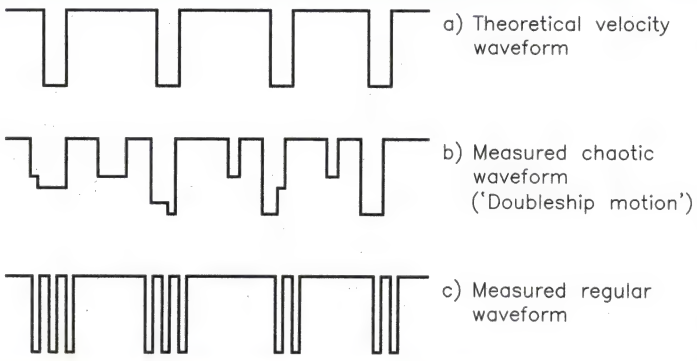

Figure 5. Different bow stroke pressures scrape across the string in different ways. As a mechanical system it is much more complicated than it looks!

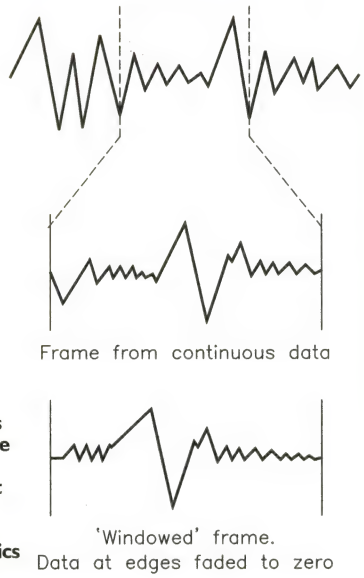

Figure 6. Analysis frames need to be windowed. Discontinuities at the frame boundaries add spurious harmonics to the analysis process.

Figure 7. Fourier analysis and synthesis are 'perfect'. On a frame-by-frame basis, no data is lost

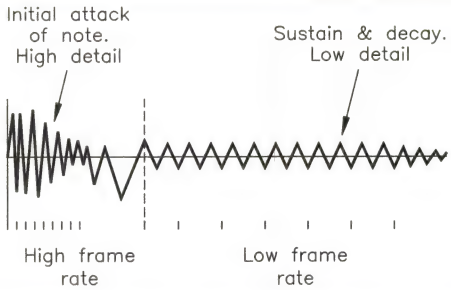

Figure 8. For best results, the frame acquisition rate should vary to catch the detail at the start of a note. The end of a note is much more static, so frames need to be much less frequent here.

be ignored if there is enough energy in nearby frequency bands, because the ear won't respond to them. This is exactly the technique used in Digital Compact Cassette and MiniDisk data compression, refer to Figure 10.

For single instrument sounds, it is also possible to analyse the sound at different velocity levels and different pitches. This creates a very full and detailed map of the instrument's behaviour over its working range, as shown in Figure 11. Here again, data can be compressed by analysing a relatively small number of frames at the extremes of the instrument's range, instead of sampling every possible note at every possible velocity level. This is possible because it is easy to interpolate between analysis frames when the sound is being recreated. Conveniently, this avoids the awkward changes in sound quality that a multi-sampled acoustic instrument can be subject to, see Figure 12.

Once all the data has been collated, it is possible to resynthesize the original sound very accurately. It is also possible to create a range of new effects that aren't possible any other way. One of the simplest, but most useful, is to give a sound a constant length, irrespective of pitch. On a sampling synthesizer, the length of a note is tied directly to the pitch, in much the same way that the effective length of a tape depends on its speed. A resynthesizer can break this link, because sounds are created on a frame-by-frame basis, and the fundamental of the result can then be tuned independently of the frame rate. It is even possible to freeze a sound by recreating a frame indefinitely – this freezes the

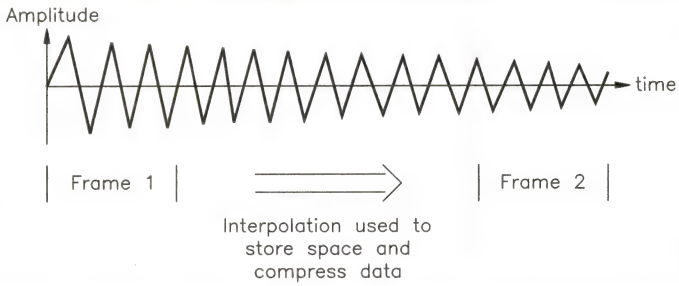

Figure 9. Data compression can be achieved by interpolating between frames. The area that is interpolated does not need to be analysed accurately, so that data becomes redundant.

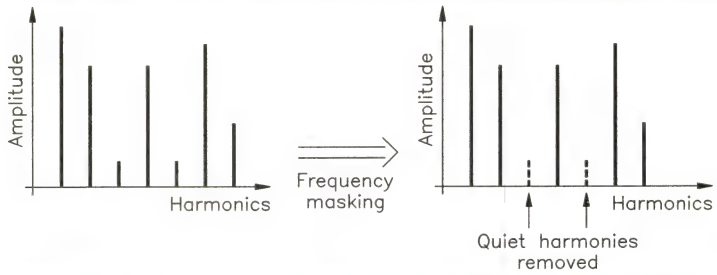

Figure 10. Data can also be compressed by removing quiet harmonics. These will usually be masked by the louder ones in the frame.

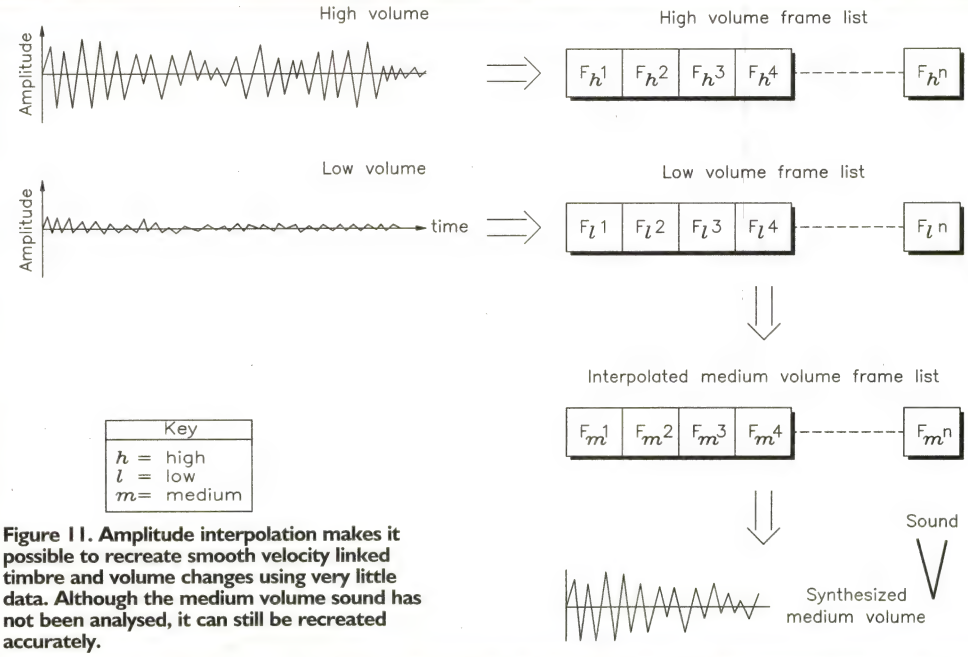

Figure 11. Amplitude interpolation makes it possible to recreate smooth velocity linked timbre and volume changes using very little data. Although the medium volume sound has not been analysed, it can still be recreated accurately.

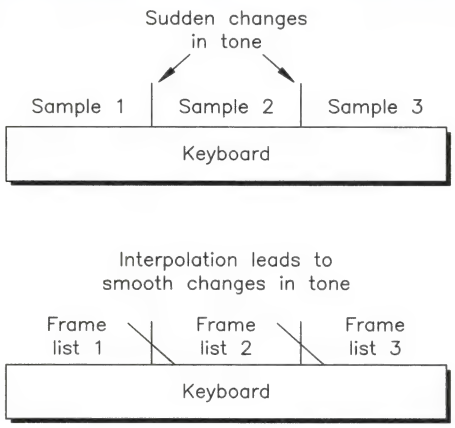

Figure 12. Pitch interpolation can avoid the sudden changes in timbre that a sample playback system is prone to.

Figure 13. By 'freezing' frame playback, a given timbre can be repeated indefinitely.

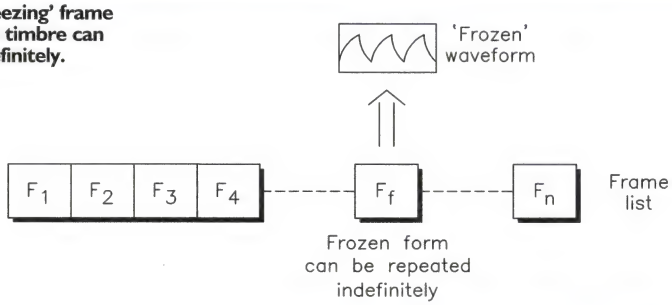

timbre, although the pitch can still be manipulated. Figure 13 depicts this effect.

Even more spectacular effects are also possible. These include sound morphing (which can be done simply by interpolating between two different analysis files) spectral multiplication (where one instrument 'plays' the sound of another), harmonic inversions and other manipulations, 'perfect' pitch shifting (so that exact copies of the original sound can be added at octaves, fifths, etc.), harmonic movement (where random extra pitch or amplitude movement is added to the analysis file, creating a very interesting chorus-like effect) and many other effects, some of which have yet to be discovered, see Figure 14.

All of this is of course, very computationally intensive. The model described above is very much an ideal one, and practical instruments tend to skip some of the finer points. Two notable examples from the past, include the Crumar GDS/Synergy and Tecnos Axcel Resynthesizer. The former used custom sine-wave generation hardware, and had a long and distinguished career playing parts for electronic musicians like Klaus Schulze and Tangerine Dream. The latter was a Canadian design that looked promising, but never quite managed to see the light of day.

The latest attempt at resynthesis comes from Oberheim, a company better known for its very highly rated traditional analogue synthesizers. The FAR system (Fourier Analysis and Resynthesis) uses the processing power of a Silicon Graphics workstation to perform the resynthesis calculations. Production models will have the processor integrated into the rest of the case, and not as a stand-alone unit as present. FAR promises to offer the first commercially available real-time resynthesis system – but it won't be for everyone. Current speculation suggests that the price may be pegged at around the $20,000 dollar mark.

And so, we come full circle, from the first synthesizers, which were powerful, but could only be afforded by the very few, to the current crop of new technologies. Thirty years on, these are far more powerful still, but just as expensive. However, if there is one constant in the fast-paced world of electronic development, it is the way that power increases and prices fall. By the end of the century, commercial resynthesizers should be as affordable as PCs are today. When that happens, and everyone has access to some of the most powerful music technology imaginable, it will no longer be a matter of technology at all – just music.

Commercial Physical Modelling

At the moment, only two ranges of physical modelling products are commercially available. The Yamaha VL series (including the VL7 and VL1 keyboards (see Photo 1), and VL1-M sound-module) offer a wide range of physical modelling options. Surprisingly, they are only one or (sometimes) two note polyphonic, which means that chords are out of the question. They are also expensive – current prices for the 'entry-level' VL7 are just over £2,000. A polyphonic version is due out later in the year, but is likely to come with a five-figure price.

Figure 14. Morphing is just one effect possible with Fourier Resynthesis. To morph two sounds the playback hardware dynamically interpolates between the two frame lists. The results can be much richer and more surprising that a simple crossfade.

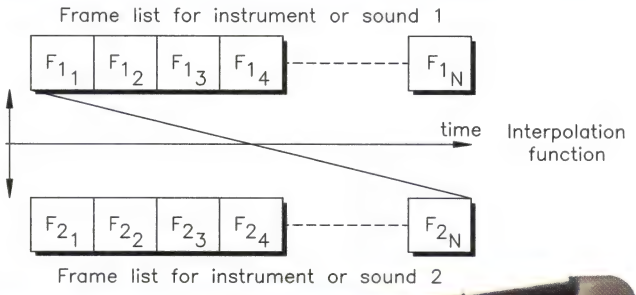

Photo 1. The Yamaha VLI synthesizer is the first commercial product to use virtual modelling technology. The details of the virtual models are hidden from the user – only the more superficial parameters can be edited.

The other instrument is the Korg Wavedrum. This is a single drum pad with a complete physical modelling system built into the case. It costs around £1,000, but includes some very sophisticated playback features. A polyphonic keyboard called the Korg Oasys will be available later this year, with an expected price tag of around £10,000, see Photo 2.

The Software Approach

All of the techniques mentioned in this series so far are based on real-time synthesis. This is very demanding technologically. Academics, experimenters and hobbyists can of course, use a non real-time approach to create sound. The process used is more like that of traditional musical composition, except that the computer is the orchestra as well as the score pad, and instrument design is as much a part of the work as the music itself. Academic music has a long history of non real-time synthesis. Max Matthews, a researcher working at Bell Laboratories, created the first such program, called Music I, in 1957. The program ran on the IBM 704 computer at IBM's headquarters in New York, and the resulting data tape was played on a valve-based 12-bit digital-to-analogue converter back at Bell Laboratories. In Matthews' own words, "Music I sounded terrible and was very limited." However, it served as the ancestor to a whole line of music making programs, and eventually led to the successful and widely used Music IV. Music IV – which was a version of Fortran that worked best on mainframes – was in turn, scaled down to give Music 11, which ran on the Dec PDP-11 range of minicomputers in the '70s and '80s, and eventually CSOUND, which is perhaps the most widely used software synthesis package today.

Most computer music software uses the unit generator approach. The instruments used are defined in one file. The definitions take the form of a list of calls to different subroutines that either create a sound or affect it in different ways – much like different modules are patched together by hand on a traditional modular synthesizer. Another file is used for the score. This contains information about the 'notes' (or sometimes just the frequencies) to be played, but also includes any number of optional extra parameters which can be used to add extra articulation to sounds. These are completely user-definable.

Using a software synthesizer is very much like programming in a medium-level language. The constructs used are more concise and powerful than direct assembly programming, but some useful features available in BASIC, and C, such as subroutines and conditionals, are missing. Listings 1 and 2 show examples of simple instrument and score files, respectively.

Even for those used to working with traditional hardware synthesizers, the power and flexibility of a package like CSOUND can be overwhelming – it is perhaps the most creative and open-ended system widely available today. Its one drawback is its relative slowness. Even on a powerful PC, a complex soundfile can take hours to calculate, and complexity is needed to avoid creating sounds that are too simple and plain to be interesting. E

Photo 2. The Korg Oasys looks set to become the state-of-the-art synthesizer of the day. Due for release later this year, it uses traditional analogue, FM, virtual modelling and other synthesis techniques, to create a range of completely new sounds. The price is expected to be around £10,000.

```
sr = 16000                  ; sample rate
kr = 1000                   ; control rate
ksmps = 16                  ; sample/control rate ratio
nchnls = 1                  ; Mono!

instr 1                     ; Start instrument number 1 definition
  a1   oscil   10000,440,1  ; Play oscillator at 440Hz with amplitude 10,000
       out     a1           ; Send to output channel
endin                       ; That's all folks!
```

Listing 1. A simple instrument definition file in CSOUND. This plays a single sine wave for a given duration.

Listing 2.

```
f1 0 4096 10 1                                  ; Fill table for osc 1 with a 4096 step sine wave

; instrument number   start time   duration (seconds)

 i1                  0            4             ; Play the sound for 4 seconds

e                                               ; End of score
```

Listing 2. A 'score' for the previous instrument. This specifies the duration and pitch of the sound.

Direct Software Addresses

The CSOUND package is in the public domain. If you would like a copy, you can use FTP to download it from a server at Bath University – email ftp.maths.bath.ac.uk for more details. Alternatively, a copy (on 3·5in. disk only) is available through the post from the author. Included in the package, is documentation in ASCII format and a wide selection of examples. Please note that you will need a 16-bit soundcard and a WAV player (preferably one that can read long sound files directly off a hard disk) to use CSOUND effectively. Some programming experience and a working knowledge of conventional music synthesis are also recommended. To obtain a copy, please send a cheque for £3 to cover postage and handling to:
Richard Wentk,
Flat 2, 25 Grosvenor Place,
Bath BA1 6BA.

A commercial version of CSOUND is also available, as part of a suite of utilities and other applications which can be used to explore the creative aspects of Fourier resynthesis and other state-of-the-art sound synthesis techniques. Details are available from:
The Composer's Desktop Project,
11 Kilburn Road,
York YO1 4DF.
Tel: (01904) 623696.

Please note:

Addresses and telephone numbers of the suppliers listed are believed correct at time of publishing.

Maplin Electronics plc does not have any connections with these suppliers and is therefore unable to answer any queries relating to their products.

Maplin Electronics plc does not give or imply any warranty or endorsement to the software packages mentioned.

Any money sent to the suppliers listed is at the sole risk of the sender.

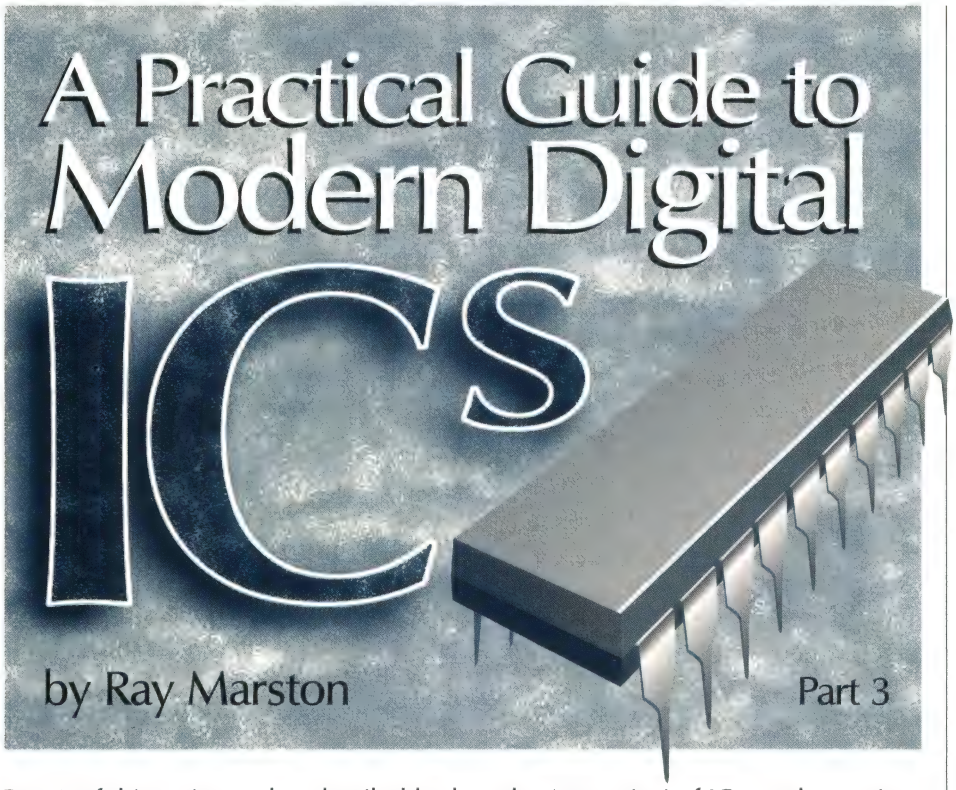

Part 2 of this series took a detailed look at the '74-series' of ICs, and at various sub-members of the TTL and CMOS families, then went on to explain matters such as TTL logic levels, noise immunity, and fan-in and fan-out. This month continues the 'TTL' theme by describing TTL's basic usage rules.

TTL Basic Usage Rules

It is usually a fairly easy matter to design logic circuitry using '74-series' TTL ICs, provided that a set of TTL basic usage rules are observed. Assuming that the matter of fan-in and fan-out has already been taken care of as described last month, there are four 'basic usage' themes outstanding, and these are described in this article.

Power Supplies

The '74-series' TTL ICs are designed to be used over a very limited supply voltage range (4·75 to 5·25V) and because they generate very fast pulse edges and have relatively low noise-margin values, they must be used with supplies having very low output impedance values (typically less than 0·1Ω). Consequently, practical TTL circuits should always be powered from a low-impedance, well-regulated supply, such as one of those shown in Figures 1 to 3, and must be used with a PCB that is very carefully designed to give excellent high-frequency supply decoupling to each TTL IC. In general, the PCB's +5V and 0V supply rail tracks must be as wide as possible (ideally, the '0V' track should take the form of a ground plane), all connections and inter-connections should be as short and direct as possible, the PCB's supply rails should be liberally sprinkled with 4·7μF Tantalum electrolytic capacitors (at least one per ten ICs) to enhance low-frequency decoupling, and with 10nF disc ceramics (at least one per four ICs, closely fitted between an IC's supply pins) to enhance high-frequency decoupling.

Input Signals

When using TTL, all IC input signals must – unless the IC is fitted with a Schmitt-type input – have very sharp rising and falling edges (for example, typical rise and fall times should be less than 40ns on LS TTL). If rise or fall times are too long, they may allow the input terminal to hover in the TTL element's linear 'indeterminate' zone (see last month's issue) long enough for the element to burst into wild oscillations and generate spasmodic output signals that may disrupt associated circuitry (such as counters and registers, etc.). If necessary, 'slow' input signals can be converted into 'fast' ones by feeding them to the IC's input terminal via an inverting or non-inverting Schmitt element, as shown in Figure 4.

Unused Inputs

Unused TTL input terminals should never be allowed to simply 'float', since this makes them susceptible to noise pick-up, etc. Instead, they should be tied to definite logic levels, either by connecting them to V_{CC} via a 1kΩ resistor, shorting them directly to the ground rail, or by connecting them to a TTL input or output terminal that is already in use. Figure 5 shows examples of the four options. The simplest option is to tie the unused input to V_{CC} via a 1kΩ resistor, as shown in (a); this resistor has to supply only a few μA of current (I_{IH}) to each input, and can thus easily drive up to 10 unwanted inputs. Alternatively, the input can be tied directly to ground, as in (b), but in this case, an input current of several hundred μA (I_{IL}) may flow to the ground rail via the input. If the unwanted input is on a multi-input gate,

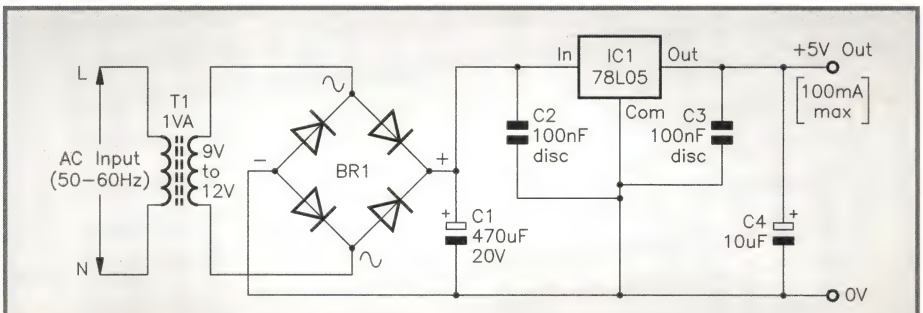

Figure 1. 5V regulated DC supply (100mA maximum output).

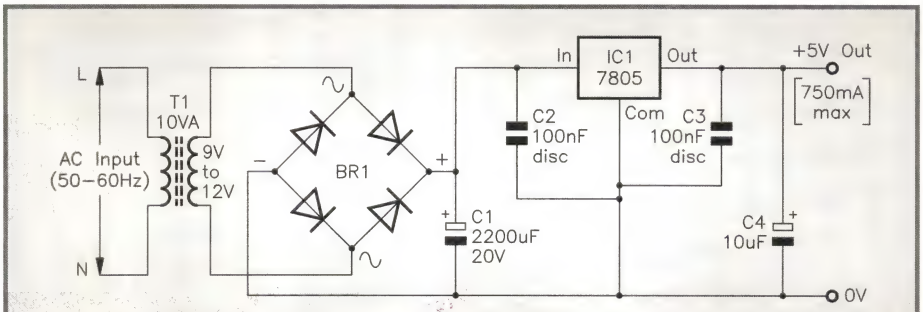

Figure 2. 5V regulated DC supply (750mA maximum output).

Figure 3. 5V regulated DC supply (5A maximum output).

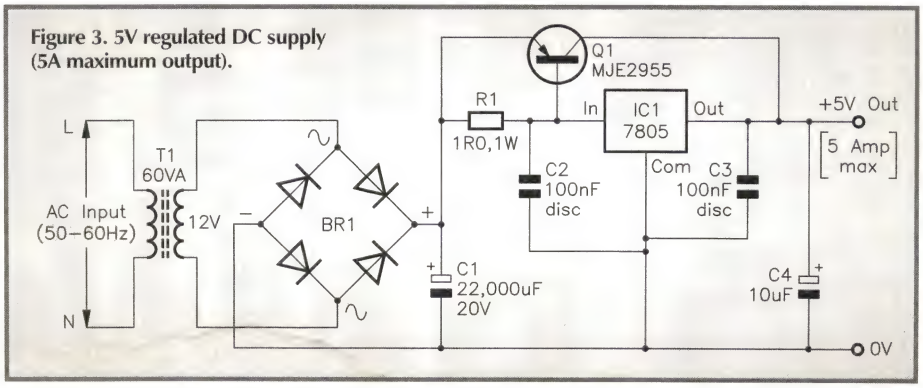

it can be disabled by shorting it to one of the gate's used inputs, as in Figure 5 (c), where a 3-input AND gate is shown used as a 2-input type. If the IC is a multiple gate type in which an entire gate is unwanted, the gate should be disabled by tying its inputs high if it is a non-inverting (AND/OR) type, or shorting them to ground if it is an inverting (NAND/NOR) type; if desired, the output of this gate can then be used as a fixed logic 1 point that can be used to drive other unwanted inputs, as shown in (d).

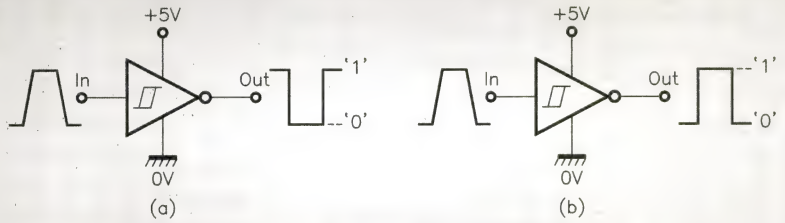

Figure 4. 'Slow' input signals can be converted into fast ones via (a) an inverting or (b) non-inverting Schmitt element.

Interfacing

An interface circuit is one that enables one type of system to be sensibly connected to a different type of system. In a purely TTL system, in which all ICs are designed to connect directly together, interface circuitry is usually needed only at the system's initial input and final output points, to enable them to merge with the outside world via items such as switches, sensors, relays, and indicators, etc. Occasionally, however, TTL ICs may be used in conjunction with other logic families (such

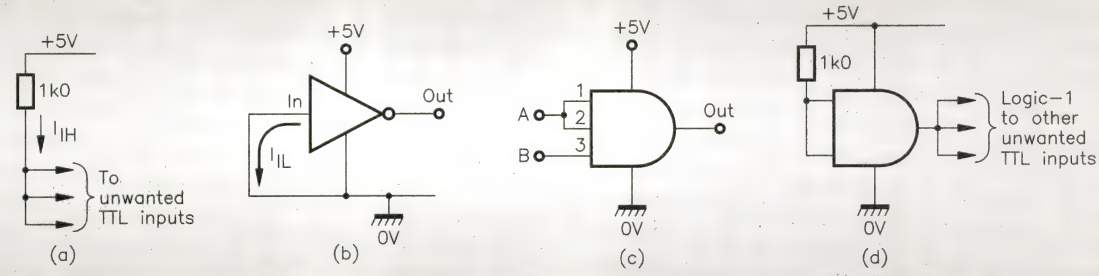

Figure 5. Alternative ways of connecting unwanted TTL inputs (see text).

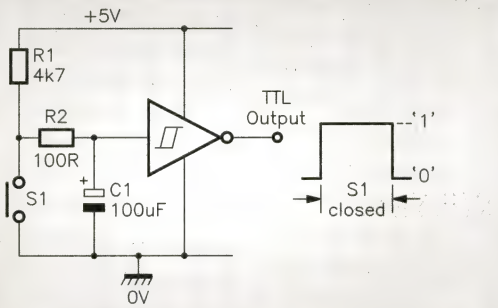

Figure 6. Switch-debouncing input interface.

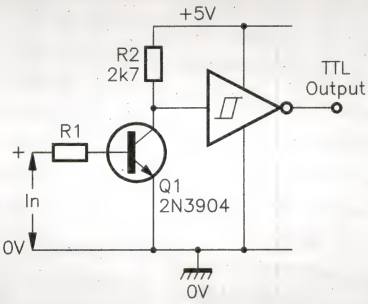

Figure 7. Transistor input interface.

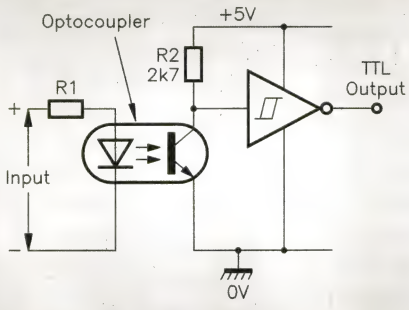

Figure 8. Optocoupler input interface.

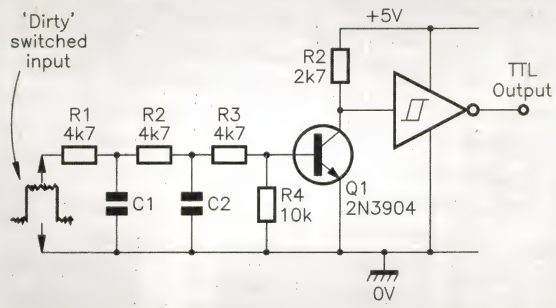

Figure 9. 'Dirty-switching' input interface.

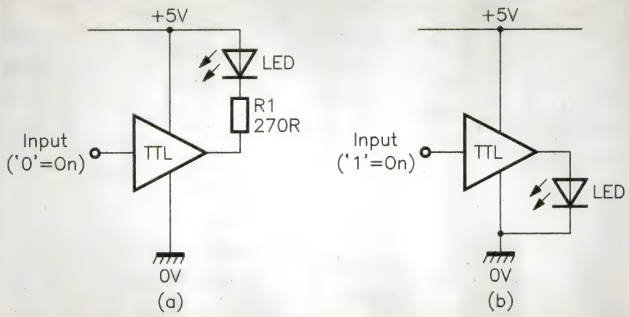

Figure 10. LED-driving output interfaces, using non-inverting TTL elements.

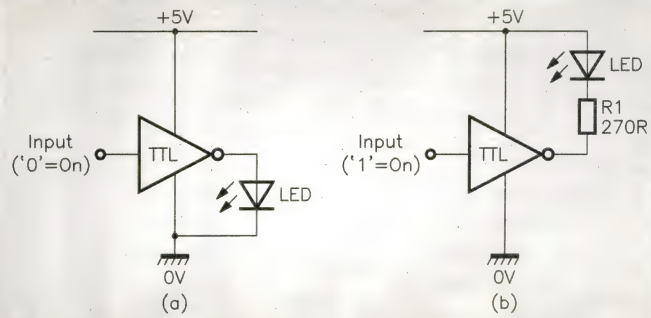

Figure 11. LED-driving output interfaces, using inverting TTL elements.

as CMOS), in which case, an interface may be needed between the different families. Thus, as far as TTL is concerned, there are three basic classes of interface circuit, as described below.

Input Interfacing

Basically, the digital signals arriving at the inputs of any TTL system must be 'clean' ones, with TTL-defined logic 0 and logic 1 levels, and with very fast rise and fall times (less than 40ns in LS TTL systems). It is the task of input interfacing circuitry to convert external input signals into this format. Figures 6 to 9 show a few simple examples of such circuitry.

Mechanically derived switching signals are notoriously 'bouncy', and must be cleaned up before being fed to a normal TTL input. Figure 6 shows a practical switch-debouncing input interfacing circuit; here, C1 charges, with a time constant of about 10ms, via R1 and R2 when S1 is open, and generates a logic 0 output via the TTL Schmitt inverter; when S1 is closed, it rapidly discharges C1 via R2, driving the Schmitt output high; the effects of any switch-generated 'bounce' signals are eliminated by the circuit's 10ms time constant, and a clean TTL switching waveform is thus available at the Schmitt's output.

Figure 7 shows a circuit that can be used to interface almost any clean digital signal to a normal TTL input. Here, when the input signal is below 500mV (Q1's minimum turn-on voltage), Q1 is cut off, and the inverting Schmitt TTL output is at logic 0; when the input is significantly above 600mV, Q1 is driven on and the Schmitt output goes to logic 1. Note that the digital input signal can have any maximum voltage value, and R1 is chosen to simply limit Q1's base current to a safe value.

Figure 8 is a simple variation of the above circuit, with the transistor built into an optocoupler; the circuit action is such that the Schmitt's output is at logic 0 when the optocoupler input is zero, and at logic 1 when the input is high; note that the optocoupler provides total electrical isolation between the input and TTL signals.

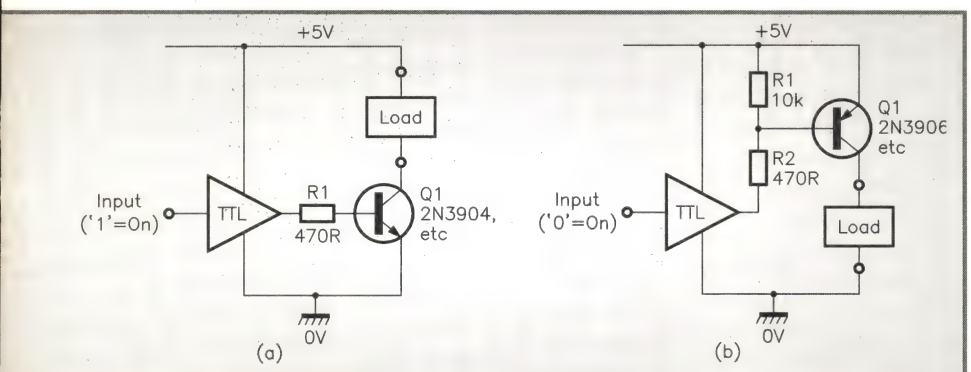

Figure 12. Current-boosting, load-driving output interfaces.

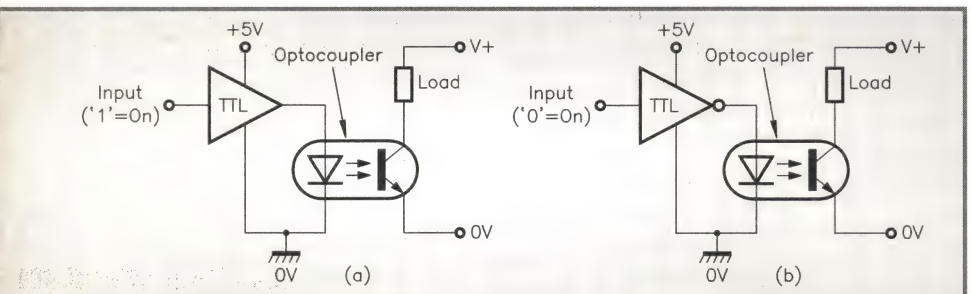

Figure 14. Optocoupled output interface.

Figure 13. Output interface to load with independent positive rail.

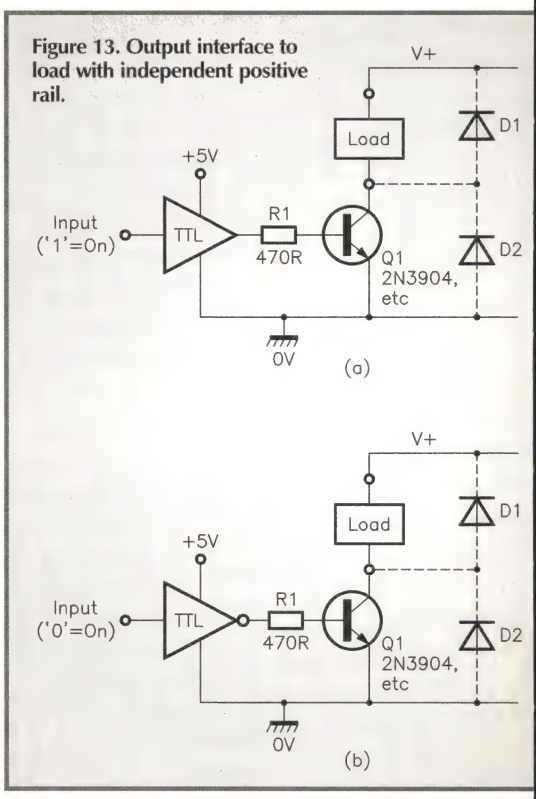

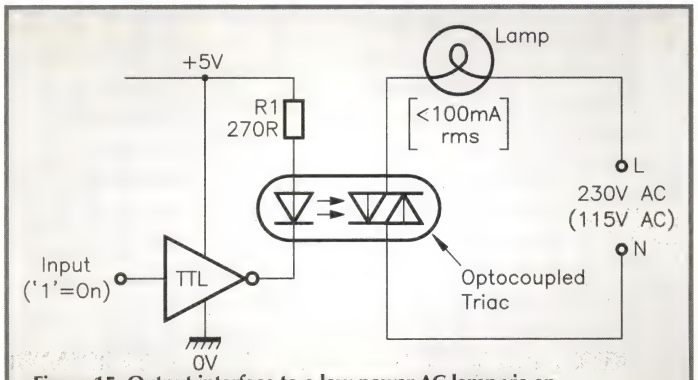

Figure 15. Output interface to a low-power AC lamp via an optocoupled triac.

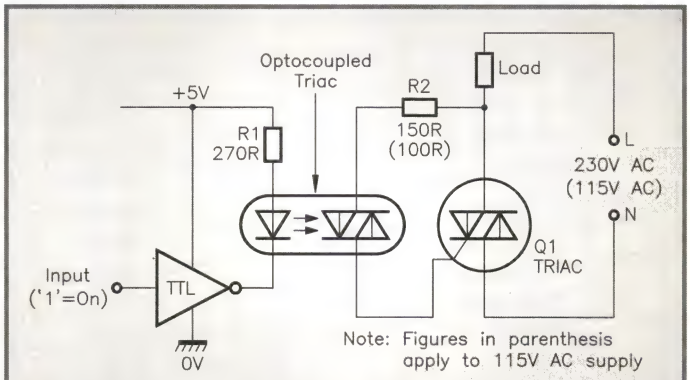

Figure 16. Output interface to a high-power, non-inductive AC load.

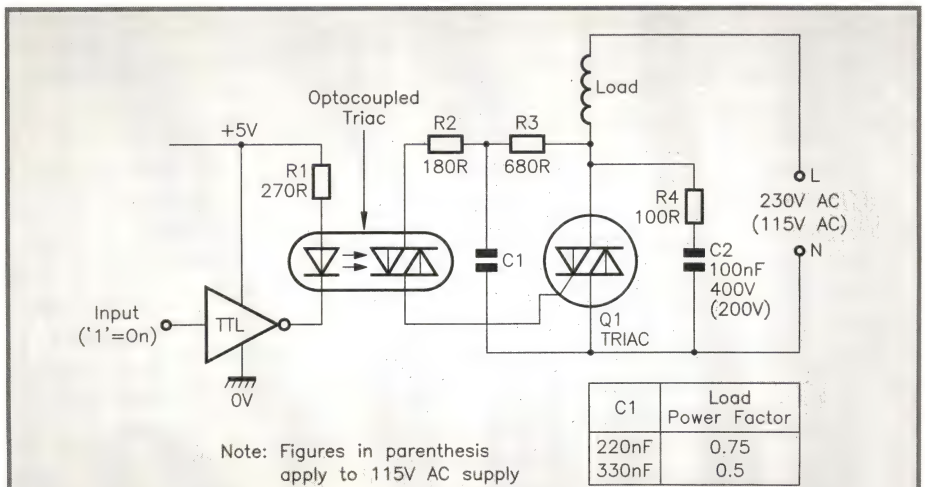

C1	Load Power Factor
220nF	0.75
330nF	0.5

Figure 17. Output interface to a high-power, inductive load.

Finally, Figure 9 is another simple circuit variation, with the basic digital input signal fed to Q1's base via the R1-C1-R2-C2 low-pass filter network, which eliminates unwanted high-frequency components and can thus convert very 'dirty' input signals (such as those from vehicle contact-breakers, etc.) into a clean TTL format.

Output Interfacing

Most TTL ICs have normal totem-pole output stages, but some of them have modified totem-pole outputs, with 3-state (tri-state) gating; a few TTL ICs have open-collector (o.c.) totem-pole output stages. Note that normal totem-pole outputs should not (except in a few special cases) be connected in parallel. TTL o.c. outputs can be connected in parallel, however, and 3-state ones can be connected in parallel under special conditions; basic methods of using o.c. and 3-state outputs will be described later in this series.

A normal totem-pole output stage can source or sink useful amounts of output current, and can be used in a variety of ways to interface with the outside world. A few simple examples of such circuits are shown in Figures 10 to 17. Figure 10 shows a couple of ways of driving LED output indicators via non-inverting TTL elements. Note that a normal TTL output can sink fairly high load currents (typically up to 50mA in an LS device), but has an internally limited output sourcing ability; thus, the LED current must be limited to a safe value via R1 if it is connected as in (a), but is internally limited in (b). Figure 11 shows alternative ways of driving LEDs, using inverting TTL elements.

Figure 12 shows two current-boosting, load-driving output interface circuits, in which the load uses the same power supply as the TTL circuit. In (a), npn transistor Q1 is cut off when the input of the non-inverting TTL element is at logic 0, and is driven on via R1 when the input is at logic 1. The reverse action is obtained in (b), where pnp transistor Q1, is pulled on via R2 when the input is at logic 0, and is cut off via pull-up resistor R1 when the input is at logic 1.

Figure 13 shows two output interface circuits that can be used to drive loads that use independent positive supply rails. Q1 is turned on by a logic 1 input in (a), and a logic 0 input in (b). If the external load is inductive (such as a relay or motor, etc.), the circuits should be fitted with protection diodes, as shown dotted in the diagrams.

Figure 14 shows two optocoupled-output interface circuits that can be used to drive loads that use fully independent DC power supplies; the load is turned on via a logic 1 input in (a), and a logic 0 input in (b). Note that the optocoupler input (the LED) could alternatively be connected between the +5V rail and the TTL output via a current-limiting resistor, using the same basic connections as Figure 10 (a) or 11 (b).

Figure 15 shows an output interface that can be used to control a low-power lamp or similar resistive load that is driven from AC power lines and consumes no more than about 100mA of current. This circuit uses an optocoupled triac, which typically needs an LED input current of less than 15mA and can handle triac load currents of up to about 100mA mean (500mA surge), at up to 400V peak. Note that optocoupled triacs are best used to activate a high-power 'slave' triac, that can drive a load of any desired power rating. Figures 16 and 17 show two such circuits.

The circuit shown in Figure 16 is suitable for use with non-inductive loads such as lamps and heating elements. It can be modified for use with inductive loads, such as motors, by using the connections of Figure 17, in which R2-C1-R3 provide a degree of phase-shift to the triac gate-drive network, to ensure correct triac triggering action, and R4-C2 form a snubber network, to suppress rate effects.

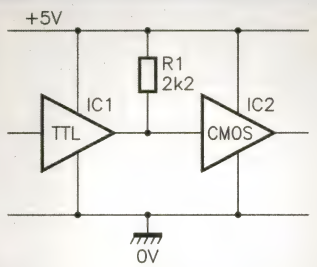

Notes: IC1 = any TTL element
IC2 = any 4000B, 74CXX or 74HCXX–series, etc., CMOS element.

Figure 18. TTL-to-CMOS interface.

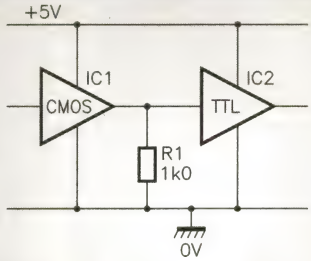

Notes: IC1 = any 4000B or 74CXX–series CMOS element.
IC2 = any Standard TTL element

Figure 19. CMOS-to-standard-TTL interface.

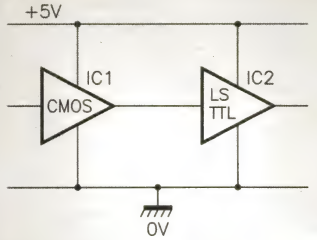

Notes: IC1 = any 4000B or 74CXX–series CMOS element.
IC2 = any LS TTL element.

Figure 20. CMOS-to-LS-TTL interface.

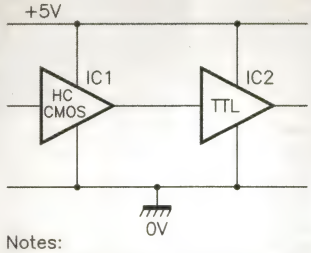

Notes:
IC1 = any HC(or AC)–series CMOS element
IC2 = up to 2 Standard TTL elements
= up to 10 LS TTL elements
= up to 20 ALS TTL elements

Figure 21. HC-CMOS-to-TTL interface.

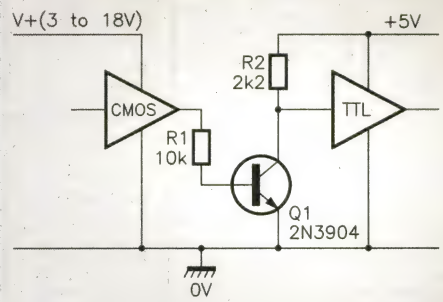

Figure 22. CMOS-to-TTL interface, using independent positive supply rails.

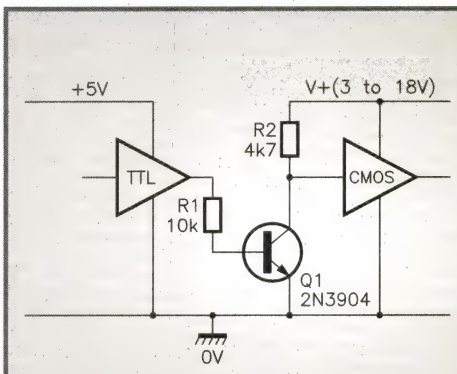

Figure 23. TTL-to-CMOS interface, using independent positive supply rails.

Logic Family Interfacing

It is generally bad practice to mix different logic families in any system, but on those occasions where it does occur, the mix is usually made between TTL and CMOS devices that share a common 5V power supply; in this case, the form or necessity of any interfacing circuitry depends on the direction of the interface, and on the precise sub-families that are involved; Figures 18 to 21 show the four most useful types of interface arrangement.

The output of any TTL element can be used to drive any CMOS logic IC (including all sub-members of the '74-series') by using the connections shown in Figure 18, in which R1 is used as a TTL pull-up resistor and ensures that the CMOS consumes minimal quiescent current when the TTL output is in the logic 1 state.

Standard 4000-series and 74CXX-series CMOS elements have very low fan-outs, and can only drive a single Standard TTL or LS TTL element, as shown in Figures 19 and 20. 74HCXX-series (and 74ACXX-series) CMOS elements, on the other hand, have excellent fan-outs, and can directly drive up to two standard TTL inputs, ten LS TTL inputs, or twenty ALS TTL inputs, as shown in Figure 21.

In cases where the TTL and CMOS ICs use individual positive supply rails (5V for TTL, 3 to 18V for CMOS), an interface can be made between the two systems by using a direct-coupled npn transistor as a level-shifter between them, as shown in Figures 22 and 23 (these simple circuits may need some refining if they are to be used at frequencies above a few hundred kHz). Finally, note that if the TTL element has an o.c. totem-pole output, a direct interface can sometimes be made between the TTL output and the input of an individually powered CMOS element, etc.; the basics of this technique will be described in Part 4 next month. E

MAGNETIC DISKS & NEW APPLICATIONS

by Frank Booty

THE ability to store and retrieve information efficiently has either hindered or aided the development and widespread use of data applications. Take the early information storage medium of clay tablets, which enabled the exchange of information, but had high associated manpower and time costs to produce and store. The interchange and use of information was inhibited by the high costs associated with this form of data storage. It was the invention of the printing press which ushered in a new era of information exchange and use.

Other barriers of information have been encountered and breached recently, as is shown from the growth and development of computers and the corresponding expansion of data applications. But, at each threshold, a significant hurdle to be overcome to gain market penetration, is cost.

Indeed the paradigm that best displays the storage dilemma for current computer systems is the storage hierarchy model (see Figure 1). As is shown, the cost of a storage medium increases as the access time to the information decreases. Put differently, the sooner the information is needed the more expensive it is. It is the environment of trade-offs. To store all applications in the main memory would provide fast access, but it would also be prohibitively expensive. Magnetic disk drives serve well as a secondary storage medium, with lower costs than memory chips, but storing large applications or rarely used data can also be very costly. So this progresses to other storage mediums that are much slower and lower in relative cost, such as optical disks and tape drives.

When the costs incurred for information storage on magnetic disk are too high and data can be shunted off to on-line tape libraries or optical disk juke box storage systems, it is called 'near on-line'. The term originates from the time involved in trying to access data, which takes longer than magnetic disk data access, yet is much shorter than for archived tape or optical media, which must be accessed by human intervention. Information typically stored in this way, includes large databases that are not time critical, or regular system back-ups.

Optical disks and tape are typically removable, and therefore, archived. The ability to exchange cartridges allows the averaging of costs across a larger amount of storage capacity. The lower cost per megabyte (M-byte) is balanced by the longer access time to data. Archived cartridges must be physically retrieved and loaded into the optical or tape drive by the user or other mechanical means. There is also the process of reading from an optical disk or tape drive with a further slow access time.

Optical drives use lasers to access the surface of disks contained inside a removable cartridge. The changes in the disks' surfaces are subsequently interpreted as bits of information. The slow access times of optical drives can be attributed to the complicated mechanics involved in aligning the laser to store and retrieve bits of information, the low power of the laser and the low rpm (revolutions per minute) of the disk media. Current optical drives store approximately 1 Gigabyte (G-byte) per 5·25in. cartridge. Optical drives also require the exchange of cartridges for increased capacity. The solution developed to overcome this dilemma was the optical juke-box – much like the juke boxes that play the old 45 rpm vinyl records. Today's optical juke boxes are designed to mechanically exchange cartridges. But again, this complicated mechanical process, while lowering cost, significantly decreases reliability and impacts on access times (see Table 1).

Magnetic tape drives store information by magnetically writing data to a tape cartridge (similar to those used in the music industry). As with the songs on tapes, data on tape cartridges can only be accessed in order (sequentially) which causes access delay. However, it should be noted that developing technologies are being incorporated in newer tape drive designs, that allow high-speed sequential access. The moderate cost of tape cartridges makes the cost per M-byte very low compared to other storage mediums. However, the serial nature of access relegates tape to a role as a back-up or archival storage device. The inability of tape storage to access data as quickly as a hard disk drive becomes evident when a disabled system must be restored.

A new level is developing in the storage hierarchy model (as shown in Figure 2), given the performance limitations of optical and tape storage devices and the emergence of high-capacity data applications. A need has been created for high-performance, large capacity storage devices, storing over 9G-bytes of data. Using Advanced SCSI (Small Computer Systems Interface) Architecture (ASA) and high-capacity head designs, it should be possible to increase the capacity of a 5·25in. full height hard disk drive in a standard form factor, to store 9·1G-bytes.

If such an increase in capacity can be accomplished with a minimal increase over the basic cost structure of a standard disk drive, the traditional cost can be spread over a much larger capacity range, giving the product a very low cost per M-byte. The zone to head for would be a half to a third of the cost per M-byte of existing hard disk drives. This would place it squarely within the price range of other storage devices.

An altered disk drive cost structure and

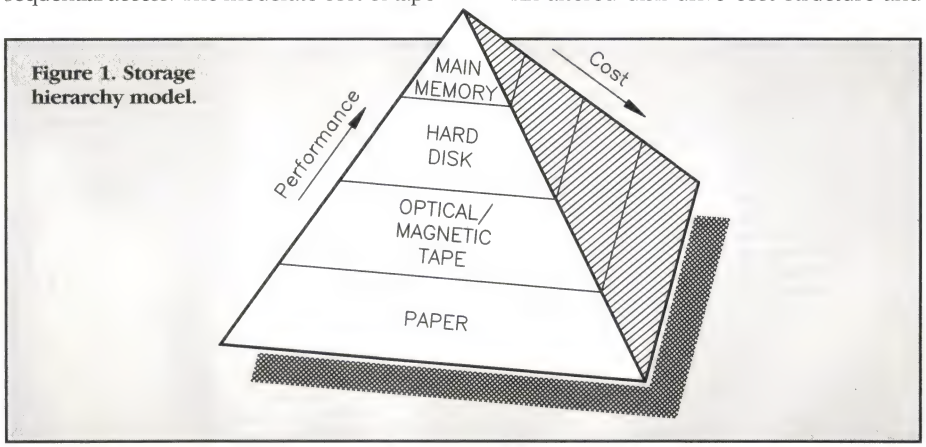

Figure 1. Storage hierarchy model.

Technology	Typical access time	Approximate cost (£/M-byte)
Main memory	50ns	35 to 50
Hard disk drive	10 to 20ms	0·7 to 1
Optical	25 to 50ms	2 to 5·5
Tape	10 to 60s	0·35 to 0·7
Juke-box or tape library	10 to 90s	0·06 to 0·35

Table 1. Relative performance and costs of storage media.

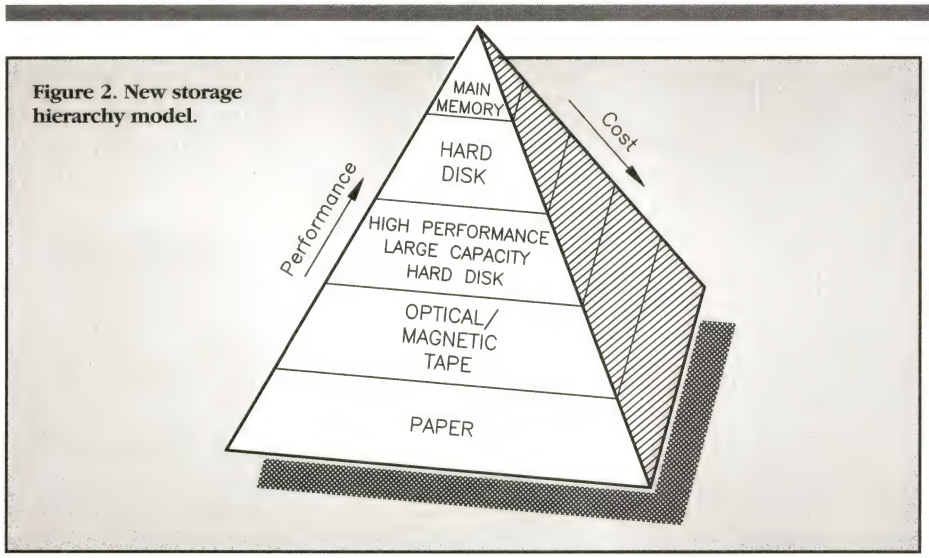

Figure 2. New storage hierarchy model.

capacity would allow the product to compete effectively with optical jukeboxes. Indeed, up to fifteen of them could be interlinked (in daisy chain fashion) to provide 135G-bytes on a single SCSI bus. A 90G-byte optical jukebox can cost upwards of £25,000, while a comparable set up of disks as mooted here, would be thousands less. The key to the lower cost is the reduced complexity of the design. That is, reduced complexity in internal design (no mechanical cartridge loading system is required) and in the use of an industry standard interface, which reduces both the initial cost and operational costs of a magnetic disk sub-system, while providing higher reliability.

But, beyond the cost, the unit would bring in a new level of performance for a medium that competes with near on-line storage devices. It would have an average seek time of 11ms (i.e., much faster than optical and tape drives). The fast seek time, coupled with a fast latency generated by a 5,400 rpm spindle speed, would provide the low access times necessary for high-performance applications. However, the greatest performance impact would be in the area of data transfer rate – there would be an average data transfer rate of 6·9M-byte/s, a figure greatly in excess of any achievable rate for near on-line storage mediums. There are even favourable comparisons with other magnetic storage devices.

A raft of possible applications is opened up by the high average data transfer rate, coupled with the high capacity of this drive. For example, manipulation of video images and sounds requires high data rates and very large volumes of capacity. A standard two hour feature length film stored on a hard disk drive using reasonable compression levels, requires 8 to 9G-bytes of capacity. To send the stored images to a screen at a standard viewing rate, requires a data transfer rate of 1 to 2M-byte/s. Both figures would be achievable.

Other applications benefiting, include large databases (due to cost, the very large ones are forced to utilise near on-line storage devices). With the drive discussed, database applications such as publication and fingerprint libraries could economically contain all records on-line. The performance increase would allow faster access to records and increased efficiency.

Existing drawbacks between cost of information access versus performance have limited the development of new data applications. The drive here would break through this barrier. The developments that could be made based on this model, are virtual reality training centres, self-service video editing stores and high-performance desktop databases.

The shift in the cost structure of high capacity hard disk storage places the units described here at a new level in the hierarchical storage model. Indeed, it obliges a re-examination of the application of data storage technology. Optical drives have been predicted to replace magnetic storage devices for many years, yet with this philosophy, the opposite effect occurs. It is a high-performance, reliable, low-cost alternative, and it is well positioned for as yet undeveloped applications, given the attraction of high capacity and low cost per M-byte.

CAR HEADLIGHTS DELAY *continued from page 52.*

CAR HEADLIGHTS DELAY PARTS LIST

RESISTORS: All 0·6W 1% Metal Film (Unless specified)

R1,4	22k	2	(M22K)
R2	47k	1	(M47K)
R3	470Ω	1	(M470R)
R5	4k7	1	(M4K7)
R6	10k	1	(M10K)
R7	91k	1	(M91K)
RV1	470k Horizontal Preset Potentiometer	1	(UH08J)

CAPACITORS

C1	47μF 25V Radial Electrolytic	1	(FF08J)
C2	1μF 100V Radial Electrolytic	1	(FF01B)
C3	2n2F Mylar Film	1	(WW16S)

SEMICONDUCTORS

D1,2	1N4001	2	(QL73Q)
D3-6	1N4148	4	(QL80B)
TR1	MPSA65	1	(QH61R)
TR2	BC548	1	(QB73Q)
IC1	U6047B	1	(AH44X)

MISCELLANEOUS

RL1	12V 16A SPDT Car Relay	1	(JM26D)
TB1,2	3-Way 5mm PCB Mounting Terminal Block Type 300	2	(JY94C)
FS1	100mA Time Delay Fuse	1	(UJ92A)
FS2	10A Time Delay Fuse	1	(UJ98G)
	20mm Fuse Clip Type 2	4	(KU27E)
	8-Pin DIL Socket	1	(BL17T)
	20swg 0·9mm Tinned Copper Wire	1 Reel	(BL13P)
	Bulkhead Mounting Box and Base Type 2	1	(YN36P)
	9·5mm PVC Grommet	1	(JX63T)
	M3 × 10mm Steel Screws	1 Pkt	(JY22Y)
	M3 Steel Nuts	1 Pkt	(JD61R)
	M3 Steel Washers	1 Pkt	(JD76H)
	M3 Shakeproof Washers	1 Pkt	(BF44X)
	M3 × 1/8in. Spacers	1 Pkt	(FG32K)
	Front Panel Label	1	(90085)
	PCB	1	(90084)
	Instruction Leaflet	1	(XV80B)
	Constructors' Guide	1	(XH79L)

The Maplin 'Get-You-Working' Service is available for this project, see Constructors' Guide or current Maplin Catalogue for details.

The above items (excluding Optional) are available as a kit, which offers a saving over buying the parts separately.

Order As 90083 (Car Headlights Delay) Price £9.99

Please Note: Where 'package' quantities are stated in the Parts List (e.g., packet, strip, reel, etc.), the exact quantity required to build the project will be supplied in the kit.

The following new items (which are included in the kit) are also available separately, but are not shown in the 1996 Maplin Catalogue

Car Headlights Delay PCB **Order As 90084 Price £2.49**

Car Headlights Delay Front Panel Label

Order As 90085 Price £1.99

NEWS Report

Static Shields

For companies within the Electronics industry, the use of static-shielding bags forms the basis of static control programmes. It's good news then, that 3M has introduced a reusable static-shielding bag for the storage and distribution of electronic equipment.

"It can be a dangerous cost-cutting exercise to use inferior or inappropriate shielding bags", said Nick Mendham, marketing manager, 3M Electrical Specialities. "When factored into the cost of a product, the cost of a static-shielding bag is insignificant when compared with its potential loss through electrostatic damage".

Contact: 3M Electrical Specialities, Tel: (01892) 511 871.

Radio Licence Changes

The Radio Authority (RA) has revised both the full and novice licence. The changes allow the RA to publish the names of individuals whose licences have been revoked. In addition, the RA is now able to restrict the information released for information in call books, where the licence holder requests that their details are withheld.

Contact: Radio Authority, Tel: (0171) 215 5000.

Robotics Tops UK Modem Market

US Robotics is, yet again, number one in the UK modem market, according to the latest figures for 1994 from research firm, Dataquest. By volume, US Robotics has taken 29·8% of the V.32bis market – modems supporting up to 14,400bps – and 27·9% of the overall voiceband market, which includes modems of all speeds. By revenue, the figures are 27·3% and 19·3%, respectively. The UK market in 1994 is estimated to have been worth some £170 million, representing over 650,000 modems sold.

Contact: US Robotics, Tel: (01734) 228200.

DRAM Production

A recent survey by Japan's 'Semiconductor Industry News' ranked Samsung Electronics as the top producer of 16M-byte DRAM chips, with a monthly production of more than 4·5 million devices. Total production of 16M-byte DRAM by the semiconductor industry in June 1995 was 22·7 million.

Contact: Samsung, Tel: (0181) 391 0333.

New Booklet Explains Mobile Phone Market

The explosive growth in consumer demand for mobile phones over the last two years, and the introduction of new digital networks led to widespread confusion within the market. To assist in dealing with these requests, Vodafone has issued a handbook detailing its Code of Practice for Consumers. Written in a straightforward question and answer format, the guide aims to provide a better understanding of Vodafone, its technologies and the Vodafone services. It also explains how subscribers should deal with any disputes or complaints that might arise, and lists useful contact numbers. Approved by the Director General of OFTEL, the Code of Practice has been given widespread circulation to service providers, dealers, public libraries, Citizens' Advice Bureaux, trading standards departments and advisory committees on telecommunications.

However, according to Martin Pipe, freelance writer, and contributor to *Electronics* and *What Cellphone*, "When looking to purchase a mobile phone, consumers should approach an independent distributor who will be able to offer advice across a whole range of operators. While Vodafone's booklet is useful to someone new to the market, remember that there are alternative operators". Contact Vodafone or your local Citizens' Advice Bureau for a copy of the Vodafone booklet.

Contact: Vodafone, Tel: (01635) 33251.

Windows '95 May Cause RAM Prices to Spiral

The launch of Microsoft Windows '95 is set to go down in history as one of the most spectacular marketing campaigns ever. Consumers waited in siege outside computer stores on the eve of August 24, to ensure they were amongst the first to receive copies of Windows '95. In the UK, Microsoft bought the entire print run of *The Times*, to give away free to readers, and launch parties were held across the world, from Covent Garden, London, to Microsoft's own headquarters in Boston. But, was is all worth it?

The initial verdict is an overwhelming no. Users rushing to load the Operating System onto their PCs should not expect the graphical wonders which Microsoft boss, Bill Gates, has promised. This is because the majority of PC owners will have machines with 4M-bytes of memory, or 8M-bytes on the outside, while Windows '95 runs optimally on machines with 16M-bytes. Despite this, Microsoft is recommending a minimum requirement of 4M-bytes of memory. According to Dataquest software analyst Karl Wong, "Performance is frankly unacceptable at 4M-bytes". Wong tried his Beta copy of Windows '95 on a PC with 4M-bytes of memory, before upgrading to 16M-bytes.

Upgrading PCs with additional memory to cope with Windows '95 is set to cost consumers up to £400 per machine. And that's if memory chips are available. A recent article by Barbara Grady from the San Francisco Reuters bureau, claimed that Windows '95 could trigger a memory shortage. Kingston Technologies, a memory chip card maker, already estimates that the demand for memory chips exceeds supply by approximately 20%. I can't help feeling that Microsoft is playing catch-up. Apple got here first with its graphical operating system over five years ago.

Contact: Microsoft, Tel: (01344) 710021.

BT Role in Introduction of Digital TV

BT is a founding member of the Digital TV Group, an industry-wide forum, formally launched in August. The forum aims to facilitate the introduction of digital terrestrial television (DTT) in the UK, in line with the timescale outlined in the recent government white paper, 'Digital Terrestrial Broadcasting'.

"BT will be working with other members of the Digital TV Group to develop the details of the technical systems necessary to ensure efficient implementation of DTT in the UK", says BT Advanced Multimedia Services manager, Graham Mills.

"We will use our experience of working with organisations defining the specifications for digital broadcasting – including the European Digital Video Broadcasting Project – to help define the necessary specifications and standards. The UK Digital TV Group will build on the work being completed within the DVB Project", added Mills.

Contact: BT, Tel: (0171) 406 8314.

Pentiums from Italian Manufacturer

Olivetti has launched a new line of Pentium PCs, designed to take advantage of both Windows '95 and Windows NT. The M6 Suprema range is available in mono or dual-processor versions, ideal for very powerful applications, including financial analysis, engineering, CAD/CAM and software development.

The Suprema range is built according to Microsoft's hardware specifications for Windows '95, and its dual-processor capability makes it the perfect platform for Windows NT. The range consists of five new models, with clock speeds covering 100 to 133MHz. Prices range from £2,699 to £4,499. All feature PCI and ISA bus architecture and plug and play technology. Instant data access is guaranteed by the Fast E-IDE interface – 16M-byte/s transfer rate.

Contact: Olivetti, Tel: (0181) 780 8232.

Optical Technology to be Fabricated in Scotland

Bookham Technology has signed an agreement with Semefab, who will manufacture Bookham's optical integrated circuits. Semefab will be running prototypes before full-scale production of wafers starts later this year. Semefab's 22,000ft.^{2} fabrication facility is based in Glenrothes, Scotland.

Contact: Bookham Technology, Tel: (01235) 445377.

New Version of Stacker for Windows '95

Stac Electronics has released a Windows '95-compatible version of its data compression product, Stacker. The new release allows users to take advantage of Windows '95's long file and folder names. Unlike DriveSpace, the compression utility included with Microsoft's new operating system, Stacker 4.1 for Windows '95 offers better compression, as much as 33% more disk space, as well as the ability to compress drives larger than 256M-bytes without adding additional drive.

Because Windows '95 uses both long file names and long folder names, previous versions of Stacker will not be compatible with the new operating system. Stacker 4.1, by comparison, utilises Windows '95 programming interfaces, which ensure full compatibility with the new operating system. Stacker 4.1 is also 100% compatible with Windows 3.1, Windows for Workgroups 3.11 and DOS. Stac has cut the price of Stacker to £40, less than 50% of the original cost. Upgrades for current users will be available directly from Stac, priced £19.95.

Contact: Stac Electronics, Tel: (01344) 873445.

Sleepy PWM Stepper Controller

It is appropriate that in the month that *Electronics* carries a feature on Stepper Motors, Allegro MicroSystems has announced a full-bridge pulse width modulation (PWM) motor driving integrated circuit, containing all the logic and power-driver functions for bipolar stepper motors. The device is rated for continuous output currents of up to ±2A, and has an output voltage rating of 50V. It also features a 'sleep' mode, which minimises power consumption when the circuit is not in use, and hence saves energy in battery-powered applications.

For chopped PWM operation, the maximum output current is determined by the user's selection of a reference voltage and sensing resistor, while the 'off' pulse duration is set by an external RC timing network. An 'enable' input controls the four drivers in the bridge, and a 'phase' input determines the current direction in the load, by selecting the appropriate source/sink pair.

Contact: Allegro MicroSystems, Tel: (01932) 253 355.

Interactive TV Chips from VLSI

VLSI Technology has unveiled three new Digital Video Broadcast (DVB)-compliant ICs for set-top box applications. The VES4143X, an enhanced, variable-rate version of the VES4123 QPSK demodulator chip, serves primarily direct broadcast satellite (DBS), the VES4113 64/256 QAM digital demodulator is used primarily in digital cable television (set-top box) applications, and the VES5453X is a forward error-correcting (FEC) digital channel decoder for either digital cable or DBS applications.

Both of the demodulator products, the VES4113 for digital cable applications and the VES4143X for satellite systems, are designed to seamlessly interface to the VES5453X FEC channel decoder. This provides the system integrator with one-stop shopping for two critical components in the set-top, and also reduces glue logic requirements. For further technical information, contact VLSI technology.

Contact: VLSI Technology, Tel: (01908) 667595.

Multi-platform Virus Attacks Word Users

S&S International, developers of Dr Solomon's Anti-Virus Toolkit, has reported a new strain of computer virus capable of infecting all Microsoft Word 6 users – including those running Word under Windows '95. The virus, which is thought to travel via e-mail Word attachments, is known to be wild in the USA, United Kingdom, and Finland. The virus is also transferred when Word documents are exchanged between machines by disk.

When an infected Word document is opened under Microsoft Word for the first time, the virus takes control as an AutoOpen macro and infects the *normal.dot* template – or any other template designated as the global default template.

A message box appears on the screen at this time, displaying the Roman numeral 'I'. Every subsequent document saved using the 'File/Save As' menu option is infected with the *WinWord. Concept virus*. If another user opens this Word file, they will also be infected by the virus – and every subsequent document they create will also be infected. Users of Dr Solomon's Anti-Virus Toolkit can download detection for this new virus from the company's BBS (01296 318810), CompuServe (GO DRSOLOMON) and CIX (*a_v_toolkit conference*).

Other users can detect the virus via Microsoft Word itself. Users are advised to select Tools/Macros and check the list of macros available. If there are macros named AAAZFS, AAAZAO, AutoOpen, Payload, and FileSaveAs, then the document is infected. S&S International has prepared a paper describing how to remove the virus for anyone who finds they are infected. This can be obtained by calling the company, and asking for Technical Support.

Contact: S&S International, Tel: (01296) 318700.

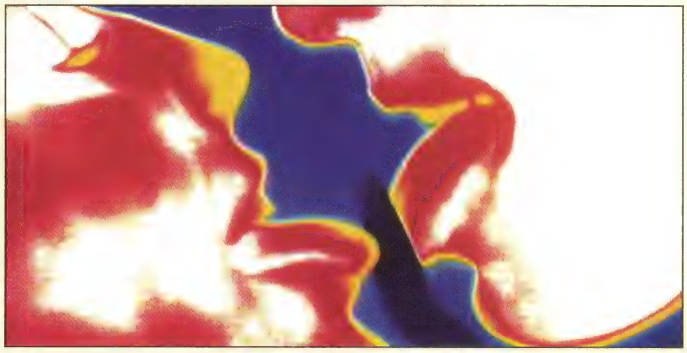

Thermal Cameras Provide Ice-cool Images

A thermal imaging system from AGEMA Infra-red Systems was used to generate the thermal pictures used in the newly-launched ice-cream advertisement from Häagen-Dazs. During the production of the advertisement, AGEMA Thermovision 1000 thermal cameras were used to depict the reactions of a couple enjoying the pleasures of Häagen Dazs.

The Thermovision 1000 is more commonly used in surveillance operations to detect the heat generated by human bodies up to several kilometres away. Typical applications include perimeter control of high security buildings, airborne law enforcement, and marine customs surveillance.

Contact: AGEMA Infra-red Systems, Tel: (01525) 375660.

Software Doubles RAM and Speeds Up Windows

Hurricane, a software suite from Helix Software, speeds up Microsoft Windows and Windows for Work Groups operating environments, as well as providing more memory and resources to programs. The Hurricane utilities are a comprehensive set of tools designed to solve the resource, memory, speed and reliability problems many experience with Windows. The utilities include a resource expander, an enhanced 32-bit VCACHE (speeds up 32 bit file access), 32 bit caching for all drives, a print cache, a dynamic RAM drive, a pentium enhancer, a screen accelerator, and other utilities which improve resource and memory handling under Windows. Hurricane is available priced £69.95 from POW! Distribution.

Contact: POW! Distribution, Tel: (01202) 716726.

Pornographic Protection

Parents can now fight back against pornography on the Internet with CYBERsitter, a Windows program giving parents the ability to either block, or be alerted to, the access of adult oriented pictures and pornography on the Internet, as well as all the popular on-line services. Currently, it is estimated that there are over 250 sites that hold material of an adult or pornographic nature on the Internet, and these sites change daily. These sites contain material in image format that ranges from glamour shots to explicit footage.

CYBERsitter works by monitoring all computer activity, so that when the child tries to download or view an adult oriented picture, the process is automatically aborted, and/or an alert is generated for later viewing. Additionally, CYBERsitter will block access to these types of files from the computer's hard disk, floppy disks, and CD-ROM drives. CYBERsitter is available now at an introductory price of £29.95 from POW! Distribution. A 30 day trial version is available free, direct from POW! Distribution, or can be downloaded from the company's Web site at **http://www.pow-dist.co.uk**

Contact: POW! Distribution, Tel: (01202) 716726.

Windows '95 Support

If you do purchase a shrink-wrapped copy of Windows '95 and run into problems, there is plenty of help at hand. CompuServe has lined up with numerous vendors to provide support for the new Operating Systems. CompuServe members can access the Windows '95 online support service from their CompuServe Information Manager (GO WIN95).

Windows '95 Support area features numerous technical and consumer-oriented services. It provides in-depth product information and trouble-shooting advice, extensive shareware products and a shareware development contest, access to the hottest Windows '95-enhancing files and drivers available, a clipping service for Windows-related news articles, and a conference area for industry and technical experts to hold interactive discussions.

Contact: CompuServe, Tel: (01734) 391064.

Public Domain CD-ROM

While the Internet is likely to end the distribution of Public Domain Software by disk, the Public Domain Software Library (PDSL) is not intending to disappear without a fight. PDSL this month launches a new CD-ROM, containing over 1,900 DOS programs and utilities, priced £10. The CD-ROM contains anti-virus software, games and games cheats, network programs and TCP/IP programs and utilities for disks, keyboards, memory, printers and tape drives.

Contact: Public Domain Software Library, Tel: (01892) 663298.

8-Bit S-Video ADC Interface

Philips has announced a Dual 8-bit S-Video low-power ADC interface. When combined with the SAA7196, Philips' video decoder and scaler, the TDA875G interface accepts live video signals from composite video and S-Video sources, such as VCRs, cameras and camcorders. Philips Semiconductors' TDA8758G devices contain all the circuitry required to undertake signal conditioning, multiplexing, automatic gain control and clamping. The TDA8758G features two 8-bit analogue-to-digital conversion interfaces to select, condition, and digitise composite and S-Video signals.

Contact: Philips Semiconductors, Tel: (+31) 40 72 20 91.

SEETRAX CAE RANGER PCB DESIGN

WITH COOPER & CHYAN AUTOROUTER

RANGER2 + SPECCTRA £400.00

RANGER & SPECCTRA AUTOROUTER
Together giving the most cost effective
PCB design system on the market TODAY !
SEETRAX'S ease of use combined with
COOPER & CHYAN'S renowned gridless
autorouter, at an outstanding price.

R2 Outputs: 8/9 & 24 pin printers, HP
Desk & Laser Jet, Cannon Bubble Jet,
HP-GL, Gerber,
NC Drill, AutoCAD DXF
Demo Disk available at £5.00 +VAT

RANGER2 £150

Upto 8 pages of schematic linked to artwork
Gate & pin swapping - automatic back annotation
Copper flood fill, Power planes, Track necking,
Curved tracks, Clearance checking,
Simultaneous multi-layer auto-router

RANGER2 UTILITIES £250

COOPER & CHYAN SPECCTRA auto-router (SPI)
Gerber-in viewer, AutoCAD DXF in & out

UPGRADE YOUR PCB PACKAGE
TO RANGER2 £60

TRADE IN YOUR EXISTING PACKAGE TODAY

Seetrax CAE, Hinton Daubnay House, Broadway Lane, Lovedean, Hants, PO8 O

Call 01705 591037 or Fax 01705 599036 + VAT & P.P

All Trademarks Acknowle

NEWS JUST IN!

Racal-Decca Marine to Supply Navigation Radars to Royal Navy

Racal-Decca Marine has been chosen by the Ministry of Defence to supply the Royal Navy with a second navigational radar for use on some frigates and destroyers. The contract, worth over £1million, is for the supply of Type 1008 radars operating in the E/F band, and which complement the existing mandatory I band navigation radars. The Type 1008 radars for the Royal Navy will be fitted with Autotrack and Geographics facilities, which enable operators to create on-screen maps which can be used to display features such as navigation marks, hazards, traffic separation schemes, minefields, swept channels and anchorages.

The radar is a Royal Navy version of the highly successful BridgeMaster series, and has been customised not only to meet the Royal Navy's specific ESM and EMC operational requirements, but also to provide ships with the International Maritime Organisation's ARPA (Automatic Radar Plotting Aid) standards, whilst providing daylight viewing on a colour display. The BridgeMaster is widely acknowledged in the civil marine world, and has become established as Britain's leading marine radar. Over 5,000 systems are now in service with civilian and merchant vessels, ranging from RNLI lifeboats to supertankers, and with a significant number of navies worldwide.

The international popularity of the BridgeMaster range of radars is attributed to its image processing system, which Racal believe is unrivalled. This results in a clear visual display, even in severe rain and sea clutter conditions. This processing capability, combined with daylight raster scan display, allows clutter to fade quickly from the screen whilst genuine targets remain visible in the manner of a traditional phosphor CRT. The Royal Navy's Type 1008 radars include a Red First Strike capability pioneered by Racal-Decca, which automatically identifies fast-moving targets such as helicopters, fixed-wing aircraft, and very fast surface craft. These targets are coloured red for immediate recognition, and their progress is marked by individual history trails.

The naval radars also offer a 30° helicopter control sector, which can be used by ships with helipads, to facilitate landing with the radar operator in contact with the pilot, or to facilitate a helicopter rendezvous when a pick-up or drop is planned. The sector is centred on ship, and may be rotated through 360° and stabilised by gyro compass on a true bearing or to the ship's heading marker. Racal-Decca Marine forms part of the maritime and industrial services activities of the Racal Electronics Group. With over 100 operating companies worldwide, nearly 70% of Racal products are sold abroad, and range from military communications and avionics equipment, to voice and data communications networks and electronic test instrumentation.

Contact: Racal-Decca Marine Limited, Paul Eastaugh, Tel: (01734) 669969.

CORRIGENDA

ISSUE 94/OCTOBER 1995.

Stray Signals, page 23, due to a fault in the processing of the film, part of the text was obliterated by the cartoon. The text should read:

Where the problems really start, is with rework. Having removed a component in order to replace it with another, of a different value, it is imperative to clean the printed circuit pads, as trying to balance the new component on top of a blob of solder is a mug's game. Sometimes, a circuit modification is involved, for example, a resistor being replaced by two in series, with a capacitor from their junction to deck – and an interesting little three-dimensional circuitry develops.

PC recently had the job of getting a prototype SMD board (laid out by someone else) up and running – a mixture of digital and analogue circuitry, but fortunately, no RF. Unfortunately, due to some quirks of the CAD layout having been overlooked, lots of separate signal runs had got themselves connected together, or else, to one of the power planes – it was a six-layer board. The only way ahead was to lift the appropriate legs of the small-outline ICs and other components from the dud tracks, and rewire with fine guage hook-up wire, resulting in the board looking rather like it was covered buy some very untidy knitting.

RS-232 EXPLAINED

by Ian Poole

The RS-232C port found on most computers these days, was initially designed as a specification to simplify the connection between computers and modems. However, its convenience has lead to its use in many more applications, including connecting a whole variety of peripherals together.

ORIGINALLY, the specification was devised when the need to be able to transmit data along telephone lines became apparent. The telephone companies saw the need to introduce some standards. As a result, the Electrical Industries Association, in the USA, created a standard for serial data transfer, known as RS-232C. It defines the electrical characteristics for transmission of data between data terminal equipment (DTE) and the data communications equipment (DCE). Normally, the data communications equipment is the modem (**mo**dulator/**dem**odulator), which encodes the data into a form that can be transferred along a telephone line.

The success of the standard has meant that it is now used for many more types of equipment. As a result, many lines defined in the specification are rarely used. This means that care has to be taken when connecting any new equipment or defining which lines are to be used in a new design.

Interface Basics

The interface is intended to operate over distances of up to 15m. This is because any modem is likely to be near the terminal. Data rates are also limited. The maximum for RS-232C is 19·2K-baud (K-bit/s), although slower rates are normally used. In theory, it is possible to use any baud rate, but there are a number of standard transmission speeds used, and these are shown in Table 1.

Rates of between 50 and 110 baud were normally used for the old teleprinters, with faster rates being employed by printers and CRT terminals. Nowadays, rates of 9·6K-baud are commonplace, although care has to be taken to ensure that the cable length does not cause a problem. This can happen when the cable is run next to another line, and spikes or hum are picked up.

The RS-232C specification does not include a description of the connector to be used. However, the most common type found is the 25-pin D-type connector. The pin connections are defined, and these are given in Table 2.

Sometimes connectors are used other than the 25-pin D-type. In the early days of home computers, the circular DIN connectors often found on Hi-Fi systems were used, but they are rarely seen these days. More common is the 9-pin D-type. This is widely found as one of the ports on today's PCs, having the connections shown in Table 3. Unfortunately, it can be seen that the TxD and RxD lines are

50
75
110
150
300
600
1,200
2,400
4,800
9,600
19,200
38,400
76,800

Table 1. Common data transmission rates (baud or bit/s).

Pin Number	Circuit Name	Abbreviation	Direction of data flow Terminal Modem
1	Protective Earth	–	–
2	Transmit Data	TxD	→
3	Receive Data	RxD	←
4	Request To Send	RTS	→
5	Clear To Send	CTS	←
6	Data Set Ready	DSR	←
7	Signal Ground	SG	–
8	Data Carrier Detected	DCD	←
9	–	–	–
10	–	–	–
11	Select Transmit Frequency	–	→
12	Secondary Channel Signal Detect	SDCD	←
13	Secondary Channel Clear To Send	SCTS	←
14	Secondary Channel Transmit Data	STxD	→
15	Transmit Signal Element Timing	Tx CLK	←
16	Secondary Channel Receive Data	SRxD	←
17	Receive Signal Element Timing	RCV / CLK	←
18	Local Loopback	LL	→
19	Secondary Channel Request To Send	SRTS	→
20	Data Terminal Ready	DTR	→
	or Connect Data Set To Line	CDSTL	→
21	Remote Loopback	RL	→
22	Ring or Calling Indicator	RI, CI	←
23	Data Signalling Rate Selector	–	→
24	External Clock	EXT CLK	→
25	Test Indicator	–	←

Table 2. RS-232 Connections.

1	Data Carrier Detected (DCD)
2	Receive Data (RxD)
3	Transmit Data (TxD)
4	Data Terminal Ready (DTR)
5	Ground
6	Data Set Ready (DSR)
7	Ready To Send (RTS)
8	Clear To Send (CTS)
9	Ring (Calling) Indicator (RI)

Table 3. 9-way D-type connections (used on PC serial communications port).

placed on different pins to those on the standard 25-way connector, a fact that has caused much confusion.

The voltage levels are one of the main items in the specification. For data signals, a voltage of between –3 and –25V represents a logic 1. The logic 0 is represented by a voltage of between +3 and +25V. Control signals are in the 'ON' state if their voltage is between +3 and +25V and 'OFF' if they are negative, i.e. between –3 and –25V.

The data is sent serially, where each bit is sent one after the next, because there is only one data line in each direction. This mode of data transmission also requires that the receiver knows when the actual data bits are arriving, so that it can synchronise itself to the incoming data. To achieve this, a logic 0 is sent as a start bit for the synchronisation, as shown in Figure 1. This is followed by the data itself, and there are normally seven or eight bits. The receiver obviously has to know how many data bits to expect, and there are often small dual-in-line (DIL) switches either on the back of the equipment or inside it, to set this information.

The data that is sent is normally in ASCII (American Standard Code for Information Interchange) format, which is shown in Table 4. It can be seen that there are several control codes that are commonly used. These are given in Table 5, and include controls for line feed carriage return, as well as others used for other types of control, including software handshaking. Although ASCII is generally used, it is not the only code. Others, including the Murray Code or EBCDIC (Extended Binary Coded Decimal Interchange Code), can be used equally well.

After the data itself, a parity bit is sent. Again, this requires setting because it is optional, and it can be even or odd parity. This is used to check the correctness of the received data, and it can indicate whether the data has an odd or even number of logic ones. Unlike many systems these days, there is no facility for error correction. Finally, a stop bit is sent. This is normally one bit long, and is used to signify the end of a particular byte. Sometimes two stop bits are required, and again, this is an option that can often be set on the equipment.

Data transmission is normally asynchronous. However, transmit and receive speeds must obviously be the same. A certain degree of tolerance is allowed. Once the start bit is sent, the receiver will sample the centre of each bit to see the level. Within each data word, the synchronisation must not differ by more than half a bit length, otherwise the incorrect data will be seen. Fortunately, this is very easy to achieve with today's accurate bit or baud rate generators.

Lines and Their Usage

Their are four types of line defined in the specification. They are Data, Control, Timing and Ground. Not all of them are required all of the time. It is possible to set up a very simple communication system using very few lines. When looking at the lines and their functions, it is necessary to remember that they are defined for a connection between a modem (the data set or communications equipment) and a terminal or computer (data terminal equipment) in mind. All the lines have directions that are given in Table 2, and when used in this way, a one-to-one cable operates correctly.

The most obvious lines are the data lines. There are two of these, one for data travelling in each direction. Transmit data is carried on

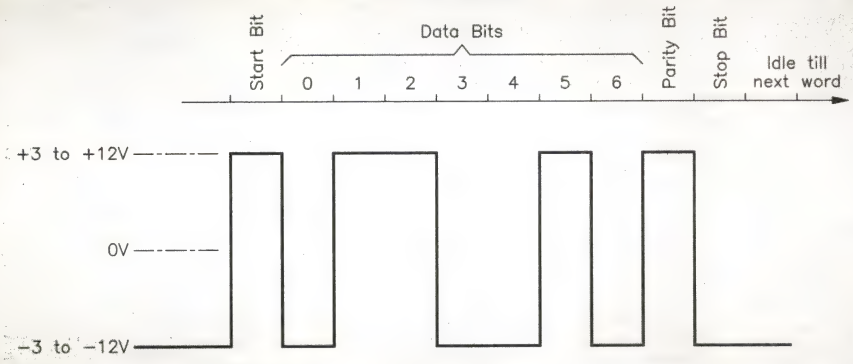

Figure 1. Serial data transmission.

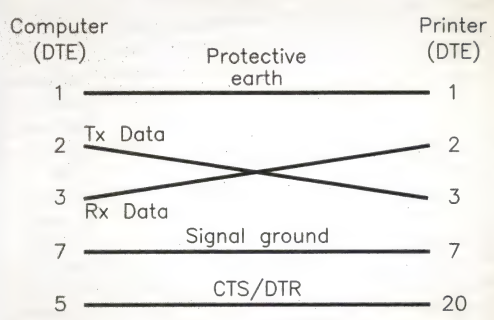

Figure 2. Minimal connection from a computer to a printer (both DTE).

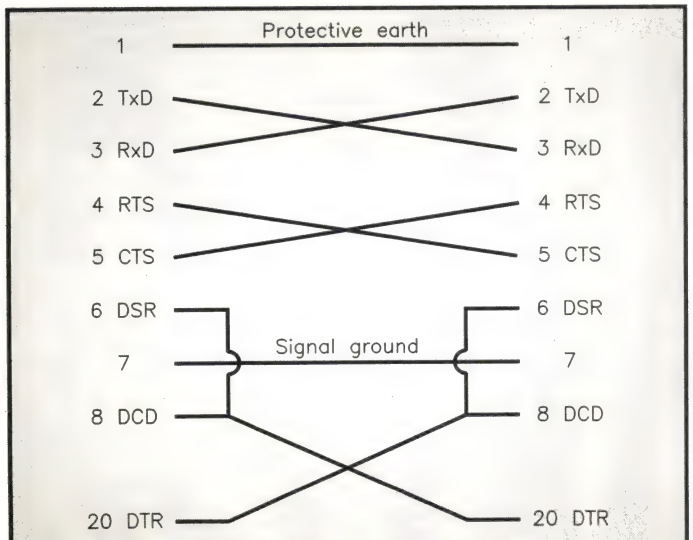

Figure 3. Full connection to connect two items of data terminal equipment (DTE).

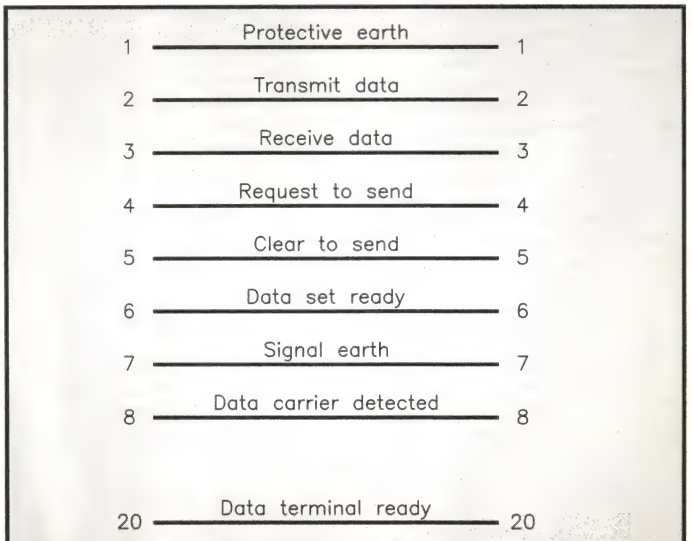

Figure 4. Full connection to connect data terminal equipment (DTE) to data set equipment (DSE) or a modem.

line 2, and the receive data is carried on line three.

The most basic of the control circuits is Data Carrier Detected (DCD). This shows when the modem has detected a carrier on the telephone line and a connection appears to have been made. It produces a high logic level, which is maintained until the connection is lost.

Data Terminal Ready (DTR) and Data Set Ready (DSR) are the main control circuits. They convey the main information between the terminal and modem. When the terminal is ready to start handling data, it flags this on the DTR line. If the modem is also ready, then it returns its signal on the DSR line. These lines are mainly used for telephone circuits. After a connection has been made, the modem will be connected to the line by using DTR. This connection will remain until the terminal is switched off line, when the DTR line is dropped. The modem will detect this, and release the telephone line.

Sometimes pin 20 is not assigned to DTR. Instead, another signal, named Connect Data Set To Line (CDSTL), is used. This is virtually the same as DTR, but differs in that DTR

Hex	Decimal	Keypress	Result	Hex	Decimal	Keypress	Result
00	00	CTRL @	NUL	40	64	@	@
01	01	CTRL A	SOH	41	65	A	A
02	02	CTRL B	STX	42	66	B	B
03	03	CTRL C	ETX	43	67	C	C
04	04	CTRL D	EOT	44	68	D	D
05	05	CTRL E	ENQ	45	69	E	E
06	06	CTRL F	ACK	46	70	F	F
07	07	CTRL G	BEL	47	71	G	G
08	08	CTRL H	BS	48	72	H	H
09	09	CTRL I	HT	49	73	I	I
0A	10	CTRL J	LF	4A	74	J	J
0B	11	CTRL K	VT	4B	75	K	K
0C	12	CTRL L	FF	4C	76	L	L
0D	13	CTRL M	CR	4D	77	M	M
0E	14	CTRL N	SO	4E	78	N	N
0F	15	CTRL O	SI	4F	79	O	O
10	16	CTRL P	DLE	50	80	P	P
11	17	CTRL Q	DC1 (X on)	51	81	Q	Q
12	18	CTRL R	DC2	52	82	R	R
13	19	CTRL S	DC3 (X off)	53	83	S	S
14	20	CTRL T	DC4	54	84	T	T
15	21	CTRL U	NAK	55	85	U	U
16	22	CTRL V	SYN	56	86	V	V
17	23	CTRL W	ETB	57	87	W	W
18	24	CTRL X	CAN	58	88	X	X
19	25	CTRL Y	EM	59	89	Y	Y
1A	26	CTRL Z	SUB	5A	90	Z	Z
1B	27	CTRL [	ESC	5B	91	[	[
1C	28	CTRL \	FS	5C	92	\	\
1D	29	CTRL]	GS	5D	93	]	]
1E	30	CTRL ^	RS	5E	94	^	^
1F	31	CTRL -	US	5F	95	_	_
20	32	space	SP	60	96	`	`
21	33	!	!	61	97	a	a
22	34	"	"	62	98	b	b
23	35	£	£	63	99	c	c
24	36	$	$	64	100	d	d
25	37	%	%	65	101	e	e
26	38	&	&	66	102	f	f
27	39	'	'	67	103	g	g
28	40	(	(	68	104	h	h
29	41	)	)	69	105	i	i
2A	42	*	*	6A	106	j	j
2B	43	+	+	6B	107	k	k
2C	44	,	,	6C	108	l	l
2D	45	-	-	6D	109	m	m
2E	46	.	.	6E	110	n	n
2F	47	/	/	6F	111	o	o
30	48	0	0	70	112	p	p
31	49	1	1	71	113	q	q
32	50	2	2	72	114	r	r
33	51	3	3	73	115	s	s
34	52	4	4	74	116	t	t
35	53	5	5	75	117	u	u
36	54	6	6	76	118	v	v
37	55	7	7	77	119	w	w
38	56	8	8	78	120	x	x
39	57	9	9	79	121	y	y
3A	58	:	:	7A	122	z	z
3B	59	;	;	7B	123	{	{
3C	60	<	<	7C	124	|	|
3D	61	=	=	7D	125	}	}
3E	62	>	>	7E	126	~	~
3F	63	?	?	7F	127	del	DEL

Table 4. ASCII (American Standard Code for Information Interchange).

NUL	Null (blank)
SOH	Start of Header
STX	Start of Text
ETX	End of Text
EOT	End of Transmission
ENQ	Enquiry
ACK	Acknowledgment
BEL	Bell (Audible)
BS	Backspace
HT	Horizontal Tab
LF	Linefeed
VT	Vertical Tab
FF	Form Feed
CR	Carriage Return
SO	Shift Out
SI	Shift In
DLE	Data Link Escape
DC1	Device Control 1
DC2	Device Control 2
DC3	Device Control 3
DC4	Device Control 4
NAK	Negative Acknowledgment
SYN	Synchronous Idle
ETB	End of Transmission Block
CAN	Cancel
EM	End of Medium
SUB	Substitute
ESC	Escape
FS	File Separator
GS	Group Separator
RS	Record Separator
US	Unit Separator
DEL	Delete

Table 5. Control codes names.

merely enables the modem to be switched onto the telephone line. CDSTL commands the modem to switch, despite anything else it may be doing.

A further two circuits, Request To Send (RTS) and Clear To Send (CTS), are also used. This pair of circuits are used together. The terminal equipment will flag that it has data to send. The modem will then return the CTS signal to give the all clear after a short delay. This signalling is utilised particularly when switched carriers are used. It means that the carrier is only present on the line when there is data to send. It finds its uses when one central modem is servicing several others at remote locations.

Secondary Lines

There are two types of line that are specified in the RS-232C specification. There are the primary channels that are normally used, and operate at the normal or higher data rates. However, there is also provision for a secondary channel, for providing control information. If it is used, it will usually send data at a much slower rate than the primary channel.

As the secondary lines are rarely used or even implemented on equipment, manufacturers often use these connector pins for other purposes. In view of this, it is worth checking that the lines are not being used for other purposes before considering using them. When the secondary system is in use, the handshaking signals operate in the same way as for the primary circuit.

Grounding

The ground connections are also important – there are two. First, the protective ground ensures that both pieces of equipment are at the same earth potential. This is very useful when there is a possibility that either item of equipment is not earthed. The signal ground is used as the return for the digital signals travelling along the data link. It is important that large currents that are not part of the signalling do not flow along this line, otherwise data errors may occur.

Typical Connections

Sometimes, connecting a system with an RS-232C interface can be very frustrating. If it is not connected up correctly, nothing will happen because the correct handshaking signals are not being received. Often, this can arise out of the confusion that exists over the correct usage of the lines. On occasions, even manufacturers have implemented the interface in a way that does not conform to the specification. Fortunately, it is usually quite easy to set the system up, because often very few of the lines are needed.

One of the most common cases encountered, is where a computer needs to be connected to a serial printer. (Note that often parallel printers are used on PCs, when they are connected to LPT 1, 2, or 3). A good starting point is to assume that both the printer and computer will have the connections as the data terminal equipment (DTE). Here, they will both transmit their data from pin 2 of the port, and will receive it on pin 3. To make the correct connection, the lead must connect pin 2 of one connector to pin 3 of the other, as shown in Figure 2. Next, it is necessary to take care of the handshake. It is likely that the printer will toggle the DTR line to indicate when its buffer is full. This should be routed to the CTS line at the computer that will inhibit data being sent. Finally, the signal grounds must be connected to ensure a return path exists for signals passing between the two pieces of equipment.

The minimal connection given in Figure 2 will provide the solution to many applications where a limited implementation of RS-232C between two terminal equipments is required. However, it is often safer to use the full implementation – Figure 3 shows how this can be achieved. It obviously requires a few more wires, but will give all the handshaking lines required. When a connection between a terminal and a modem is required, a one-to-one cable is needed. However, as it is unlikely that any of the secondary circuits will be used, the connections shown in Figure 4 will be all that is required.

Software Handshaking

The most usual method for handshaking between two items of equipment, is to run additional lines to control the flow of information. Unfortunately, this is not always possible. For example, when data is being sent along a telephone line, no additional circuits will be available. In instances like this, other methods need to be employed; two types that are occasionally used, are known as X-ON/X-OFF and EXT/ACK.

The X-ON/X-OFF method operates by sending the control characters along the data line from the equipment receiving the data. When X-ON is received at the transmitting end, data transmission is started. Once the input buffer on the terminal or printer starts to become full, the X-OFF character is sent to stop the data. When sufficient space appears in the buffer, X-ON can be sent to the transmitter to resume the data flow.

With the EXT/ACK method, the data is separated into blocks, and after each block has been sent, the control code ETX is transmitted to show the end of this block of text. Once the data has been accepted and there is sufficient space in the input buffer, the ACK (acknowledgment) control code is sent. Once this has been received, the next block of data is sent.

Current Loop

Although the RS-232C interface standard was devised with voltage signalling in mind, some equipment, including older teleprinters and the like, use a current loop form of interface. Some recent printers also include it as a secondary form of signalling, which can be used instead of the voltage one. Usually, a switch has to be changed or a jumper moved on a board for this to be used.

Instead of using the voltage levels for signalling, the current loop system uses a current that is switched on and off. This has the advan-

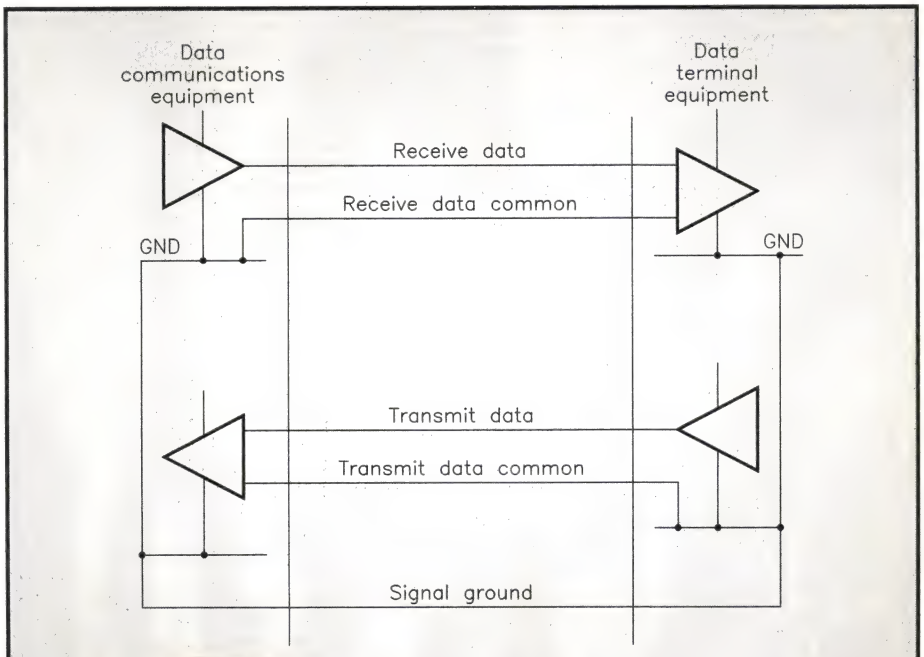

Figure 5. RS-423 Interconnection.

tage that a current generator can be used for a long line with losses, as this will maintain its levels whatever the resistance involved. Normally a current of 20mA is used, although sometimes it can be 60mA. Modern equipment also has the advantage that the current loop is often isolated from ground using opto-couplers.

As current loop signalling is not defined under RS-232C, there can be some ambiguity in deciding which equipment supplies the current source. Often, one will be available at either end, but it is necessary to decide which end will provide the current when making up the lead for the installation.

RS-422/423

Transmissions using RS-232C are limited in their speed, and the length of cabling over which data can be transferred. Normally the maximum is 19·2K-baud and the distance 15m, although for slow transmission speeds, longer lengths can sometimes be used. However, care must be taken, because stray pick up becomes a problem as the length is increased. This can result in the data becoming corrupted even when using slow transmission speeds.

To overcome these problems, further specifications have been introduced, namely, RS-422 and RS-423. The RS-423 specification allows for data transmission speeds of up to 100K-bit/s, while RS-422 allows speeds of 10M-bit/s. To achieve this, balanced transmission techniques are used. In the case of the RS-423 interface, it is possible to connect to both the old RS-232C specification and the new, very fast RS-422 specification. This makes it ideal for use in many applications where a versatile, all-purpose interface is needed without very fast speeds. Figures 5 and 6 show how the respective interfaces are connected. To connect an RS-232C port to an RS-423 one, the 'Send Common' line on the RS-423 port is connected to the 'Signal Ground' line on the RS-232C port.

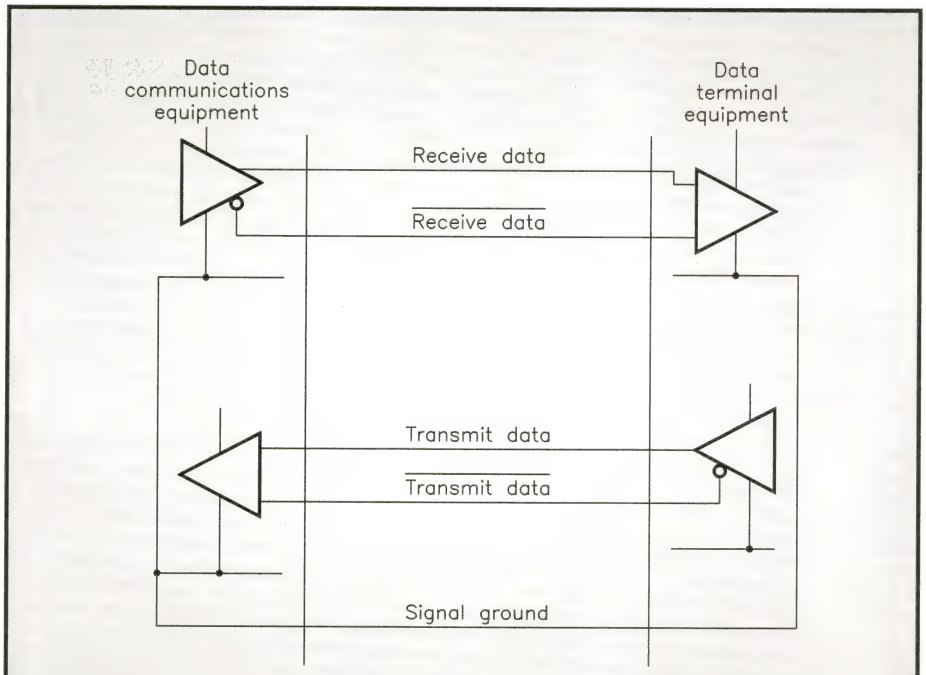

Figure 6. RS-422 Interconnection.

Summary

The RS-232C specification is still widely used. Although faster specifications exist, it is likely to remain in use for many years to come. One of the reasons for this, is the fact that it is found on most of today's personal computers. Although the parallel 'LPT' ports are used almost universally for printers, it is still used for many other purposes, including the connection of the computer to a modem.

CLASSIFIED

Placing an advertisement in this section of *Electronics* is your chance to tell the readers of Britain's Best Selling Electronics Magazine what you want to buy or sell, or tell them about your club's activities – Absolutely Free of Charge! We will publish as many advertisements as we have space for. To give a fair share of the limited space, we will print 30 words free, and thereafter the charge is 10p per word.

Placing an advertisement is easy! Simply write your advertisement clearly in capital letters, on a post-card or sealed-down envelope. Then send it, with any necessary payment, to: Classifieds *Electronics – The Maplin Magazine*. P.O. Box 3, Rayleigh, Essex SS6 8LR. Advertisements will be published as soon as possible, space allowing. No responsibility is accepted for delayed publication or non-inclusion of advertisements.

Readers who have reasonable grounds to believe they have been misled as to the nature of an advertisement are advised to contact the Publisher and their local Trading Standards Office.

COMPUTERS

ARCHIMEDES 420/1, 85MB Hard Drive, excellent condition. Monitor needs some attention. Lots of games, etc. £320 o.n.o. Tel: Norman (0181) 473 0554.

COMPAQ CONTURA AERO 4MB memory modules (manufacturer's No. 190532-001) brand new unopened, £90. Tel: (01727) 76412.

MULTITECH MODEM Model MT 1932ZDXK. 14400bps, hardly used. £85. Tel: Norman (0181) 473 0554.

VARIOUS

CRYSTAL OSCILLATORS, DIL, metal can, frequencies 16.388MHz, 24.576MHz, (CW90X), 32.768MHz. £1 each. Tel: (01483) 66099.

MAPLIN MATINEE ORGAN. For further information and sensible offers, Tel: (01296) 23670. Buyer collects.

MAPLIN MIXER KIT PCBs. Part assembled, LK89, LK82, LK91, YM20 and YM21. Sensible offers following owners death. Tel: (01424) 610446. Or e-mail andrewsteel@xe.org.

MICRO CONTROLLER TMS 77C82-JDL, (UL66W) Windowed. £10 (new £60). Tel: (01483) 66099.

STATIC RAM HM62256LP-10 32Kx8, (UH40T). £3. Tel: (01483) 66099.

OSCILLOSCOPE TELEQUIPMENT D61 double beam 10MHz, good condition with manual. £50. Tel: Dennis (0181) 977 6649.

WANTED

SERVICE MANUALS, etc., for OLIVETTI PC1050 M/board and for the PC1050 CRT Centre. Contact A.R. Colquhoun, 'Ashdown', Eden Vale, East Grinstead, Sussex, RH19 2JH.

SGS TOP OCTAVE GENERATOR CHIP type M083. Tel: (01522) 538832.

AUDIO

GOODMANS 6 DISC CD PLAYER. Will take any reasonable offer. Tel: (0181) 651 4085.

KORG M1 Ungigged, unscratched, hardly used in orignal box. £20 o.n.o. Tel: (0181) 651 4085. Croydon

QUAD FM TUNER VALVE. Circa 1964, in good condition with manual, £20. Tel: Dennis (0181) 977 6649.

CLUB CORNER

THE BRITISH AMATEUR ELECTRONICS CLUB (founded in 1966), for all interested in electronics. Four newsletters a year, help for members and more! UK subscription £8 a year (Junior members £4, overseas members £13.50). For further details send S.A.E. to: The Secretary, Mr. J. F. Davies, 70 Ash Road, Cuddington, Northwich, Cheshire CW8 2PB.

BURY ST. EDMUNDS AMATEUR RADIO SOCIETY. Meetings held at Culford School, 7.30pm for 8.00pm on the third Tuesday of each month, unless otherwise stated. Further details from Kevin Waterson, (G1GVI), 20 Cadogan Road, Bury St. Edmunds, Suffolk IP33 3QJ. Tel: (01284) 764804.

ELECTRONIC ORGAN CONSTRUCTORS SOCIETY. For details of meetings, Tel: (0181) 902 3390 or write to 87 Oakington Manor Drive, Wembley, Middlesex HA9 6LX.

CRYSTAL PALACE & DISTRICT RADIO CLUB. Meets on the third Saturday of each month at All Saints Church Parish Rooms, Beulah Hill, London SE19. Details from Wilf Taylor, (G3DSC), Tel: (0181) 699 5732 or Bob Burns, (G3OOU), Tel: (01737) 552170.

THE LINCOLN SHORT WAVE CLUB meets every Wednesday night at the City Engineers' Club, Waterside South, Lincoln at 8pm. All welcome. For further details contact Pam, (G4STO) (Secretary). Tel: (01427) 788356.

MODEL RAILWAY ENTHUSIAST? How about joining 'MERG', the Model Electronic Railway Group. For more details contact: Paul King, Honorary Secretary, 25 F ir Tree Way, Hassocks, West Sussex BN6 8BU.

SCIENCE AT YOUR FINGERTIPS, for 'hands-on' science experiences and experiments, *Science at Your Fingertips Science Review*, Membership £2.50. For further details, please contact Daniel and Caroline Gee, The S.A.Y.F., 37 South Road, Watchet, Somerset TA23 0HG.

SEEMUG (South East Essex Mac User Group), meet in Southend, every second Monday of each month. For details Tel: Michael Foy (01702) 468062, or e-mail to mac@mikefoy.demon.co.uk.

SOUTHEND & DISTRICT RADIO SOCIETY meets at the Druid Venture Scout Centre, Southend, Essex every Thursday at 8pm. For further details, contact: P.O. Box 88, Rayleigh, Essex SS6 8NZ.

SUDBURY AND DISTRICT RADIO AMATEURS (SanDRA) meet in Gt. Cornard, Sudbury, Suffolk at 8.00pm. New members are very welcome. Refreshments are available. For further details please contact Tony, (G8LTY), Tel: (01787) 313212 before 10.00pm.

TESUG (The European Satellite User Group) for all satellite TV enthusiasts! Totally independent. TESUG provides the most up-to-date news available (through its monthly 'Footprint' newsletter, and a teletext service on the pan-European 'Super Channel'). It also provides a wide variety of help and information. Contact: Eric N. Wiltsher, TESUG, P.O. Box 576 Orpington, Kent BR6 9WY.

WIRRAL AMATEUR RADIO SOCIETY meets at the Ivy Farm, Arrowe Park Road, Birkenhead every Tuesday evening, and formally on the 1st and 3rd Wednesday of every month. Details: A. Seed (G3FOO), 31 Withert Avenue, Bebington, Wirral L63 5NE.

WIRRAL AND DISTRICT AMATEUR RADIO SOCIETY meets at the Irby Cricket Club, Irby, Wirral. Organises visits, DF hunts, demonstrations and junk sales. For further details, please contact: Paul Robinson, (G0JZP) on (0151) 648 5892.

WINCHESTER AMATEUR RADIO CLUB meets on the third Friday of each month. For full programme contact: G4AXO Tel: (01962) 860807.

BBS CORNER

APPLE CRACKERS. FirstClass Client BBS, mainly for AppleMac and PC users. Baud rate 2·4K-bit/s to 14·4K-bit/s, 8 data bits, no parity, 1 stop bit. Tel: (01268) 781318/780724.

MACTEL METRO/ICONEX. FirstClass Client BBS, AppleMac and PC users. E-mail address on Internet for registered users. Baud rate 2·4K-bit/s to 14·4K-bit/s, 8 data bits, no parity, 1 stop bit. Tel: (0181) 543 8017 (Metro) or (0115) 9455417 (Iconex).

SPIDER! AMIGA BBS. The lighter alternative . Mainly Amiga and some PC files. Fidonet, Mercurynet and Mufonet. Online games. Speeds up to 19200. Tel: (01568) 613520.

@Internet

According to a recent study by the National Opinion Poll, the Internet was used by 2·4 million people in the UK over the last year. Forecasting 50% more than this over the coming year, the study shows that use of the Internet is far more common than previously thought. MSN – maybe so network!

While Microsoft's Windows '95 is now on a desktop near you, Microsoft Network – its new networking service – looks set only to remain a bulletin board service in the UK for the near future. In the US, Microsoft Network went online on the Internet from 24th August – day one of Windows '95 release. But here in the UK, it remains a remote access bulletin board-style service, which you dial into. As a result, 'phone costs for users living outside the MSN points-of-presence will obviously be quite high. Microsoft expects to upgrade the service to an Internet one sometime next year.

The fact that it's late going online here doesn't seem to be stopping Microsoft from cranking up its services on MSN though. It's about to invest a considerable amount of money (over a billion UK£ has been voiced) in Turner Broadcasting, the news media corporation, in return for services for the network. News and business video programmes will result, which Microsoft obviously feels it is essential for it to crack the business and home computing Internet market. Prices for MSN are around the £60 a year tag, or £5.99 per month. These charges give two hours of free use, with additional hours charged at £3.25. Interestingly, US users of MSN will pay far less, with hours being charged at just over £1. Telecommunications in general cost a lot more in the UK than in the US, and this is probably the main factor in this price difference, and other Internet providers have similar variances intercontinentally.

However, whether Microsoft's aim at providing a serious threat to existing Internet providers succeeds depends, of course, on the service it provides. With a rich and high-quality interface, which is what Microsoft intends, the usual Internet providers will certainly have a run for their money. Microsoft is having significant problems in the US, though, with legal action possibly being taken against the fact that the MSN tools are effectively bundled free with Windows '95. In a compromise, Microsoft has indicated that it will limit subscribers to MSN at 500,000, and not undercut rival providers. In effect, this is no big deal for Microsoft, because the technicalities of setting up such a large network worldwide are huge. Setting the limit of 500,000 at this time will merely help it get the network into place without too many grumbles from annoyed customers. At a later time, when the dust has settled and the court proceedings have been going on so long no-one will remember what they're all about, Microsoft will probably then increase the subscriber number to suit.

Online Pet Companion

Just when you thought Web pages could get no wackier, we bring news of a site which has just sprouted up in the USA. Fed-up with browsing the Web? Then let your cat or dog have a go! Cyberpet accessed at **http://www.cyberpet.com**, is a web service for the domestic animal kingdom. James Herriot would be impressed.

Once online, your feline or canine friend can choose its own personal hero CyberDog or CyberCat, and follow along through the pet door of its choice to learn about breeds, find a breeder, locate a rescue group, or enjoy a 'treat'. Information on health general nutrition, breeding, current events of interest, plus hypertext links to many other resources are all there at the push of a paw. Cyberpet is still growing and changing, to provide new and fun things on every visit. Designers Don and Gretchen Plemmons welcome viewer input via the electronic mail address posted on their page.

Liberal Online

Cranking up for the next general electronic, the Liberal Democrats have set up a new WWW page at **http://www.libdems.org.uk**. The new area is highly graphical, and shouldn't be accessed by faint-hearted PCs. Within the Web site, there is loads of historical information about the party, contact details for all of the liberal democrat MPs, including Paddy Ashdown, and discussion forums. The Liberal Democrats take the lead within Westminster for online access. The party has been using e-mail for over a year, and moderates several conferences on CIX providing a forum for people to discuss liberal policy online.

CompuServe Welcomes Windows '95 Network, But . . .

CompuServe has welcomed the arrival of the Windows '95 operating system. But at the same time, CompuServe has joined the ranks of Internet Service Providers in opposing Microsoft's decision to bundle the Microsoft Network with its operating system. CompuServe believes that the bundling of applications with a dominant-positioned operating system is damaging to the industry, and ultimately will limit consumer choice.

"Windows '95, with its easy-to-use features and outstanding user interface, represents a milestone in the personal computing industry", said Robert J. Massey, CompuServe President and CEO. "By making a product that is easy to use and understand, Microsoft will open up the computer to millions who never before thought they could use a computer. In addition, the awareness of going online that Microsoft has created with the launch of its Microsoft Network will benefit everyone in the online industry.

Massey continued, "While we are pleased that Windows '95 has finally arrived on the scene, we continue to oppose the bundling of Microsoft Network in the Windows '95 application. By attempting to leverage its control in the operating system market to dominate the online industry, Microsoft is casting a cloud over the future of cyberspace".

CompuServe has announced support for Windows '95, and will develop a CIM Interface, designed exclusively for Windows '95, that will allow its members to take advantage of the capabilities of the new operating system. CompuServe has also announced that it is opening numerous areas where members can get timely, expert Windows '95 service and support, ranging from installation advice to how to restore an Internet Browser after installing Windows '95. Mosaic In A Box for Windows '95, an Internet access product, was also recently announced by CompuServe.

Contact: CompuServe, Tel: (01734) 391064; Microsoft, Tel: (01344) 710021.

Microsoft Network

The launch of Windows '95 brought with it the launch of Microsoft Network (MSN). This is Microsoft's attempt at providing a high quality, value added Internet service, similar to CompuServe. MSN offers exclusive access to its own expansive collection of rich, interactive multimedia information, services, and entertainment. MSN uses the same interface as Windows '95 – in fact, MSN access is bundled as part of Windows '95. File finding and key word searches in MSN are just like searching for files on your computer. MSN is not only an online service, but also provides full access to the Internet. Explore the World Wide Web and the rest of the Internet, with full TCP/IP PPP access.

Contact: Microsoft, Tel: (01344) 710021.

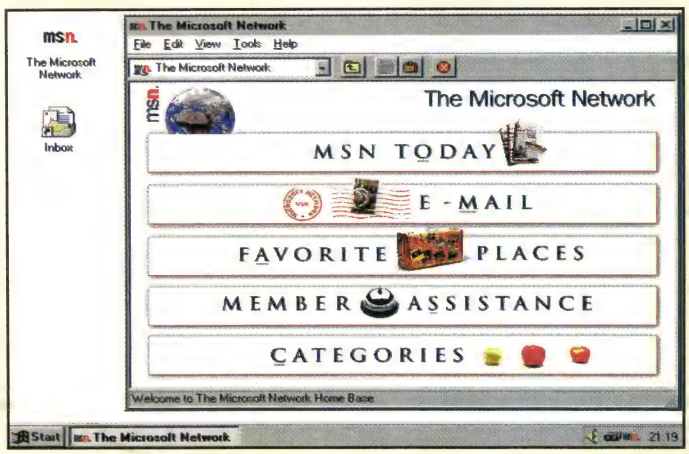

Vauxhall Bring True Multimedia to Web

At last a truly multimedia Web site. The Vauxhall Web site accessed at **http://www.vauxhall.co.uk** is one of the first sites to make full use of the available multimedia tools, and is in fact, billed as an interactive advertisement.

The site consists of a library of interactive menus, pictures and information screens, which has been developed with the support of IBM and the advertising agency, Lowe Howard Spink. The initial campaign features the Vauxhall Frontera four-wheel-drive recreational vehicle.

The Vauxhall site differs from what we have come to know as traditional sites, in that the user explores and experiences the Frontera through a menu of interactive screen displays. These displays feature real audio sound and video playback.

CD-ROM Meets the Internet

Recognising the potential for combining CD-ROM and Internet technologies, Verity, a provider of content retrieval software applications, has introduced the Topic WebAgents Publishers Toolkit. With Topic WebAgents, publishers can now disseminate information on CD-ROMs and provide access to live updates on the Internet, therefore providing customers with the speed and convenience of local data, coupled with the timeliness of Web access.

"By integrating the Topic search engine with Web browsers, we have developed a product that offers the rich, cost-effective and mass distribution capabilities of CD-ROM with the immediacy and ease-of-use of the Web", says Philippe Courtot, chairman and CEO of Verity. "Now, with a single Mosaic interface, users can browse and search a CD-ROM containing HTML, SGML, PDF and text documents, and look for updates on a Web server".

Topic WebAgents lets users search for information using a standard Web browser to access a desktop CD-ROM, a local network and the Internet. By entering a query, which can be as simple as one or a few words, Topic WebAgents can search for information on the local CD-ROM with links to retrieve original documents stored on the CD or anywhere on the Internet, where the information is located transparently to the user. Additional information, including up-to-the-second updates to the CD, can be retrieved from Topic WebSearcher using the same search form. Users are then presented with a relevancy-ranked list of documents based on search criteria.

Contact: Verity, Tel: (01372) 747076.

Conner on Web

Hard disk manufacturer, Conner, has opened for business on the Web. Computer users can connect to Conner's Web site at **http://www.conner.com**. The Conner Web site makes a full range of information instantly available about the company and its line of disk drives, tapes drive, storage management software and disk array subsystems. In addition, users can quickly locate worldwide numbers for customer service, technical support, repair centres, product returns and Conner's bulletin board.

The Superhighway – History in the Making

"Humanity has always hankered after rapid access to information because of the power it affords – I see the superhighway as part of a historical trend", said John Moroney, lead author in a new report just published by Ovum, Applications for the Superhighway.

Ovum believes that the superhighway will develop in a series of three waves up to and into the 21st Century. In the first stage, suppliers will drive development. The rewards may be slow to achieve, but they are there for suppliers who take a medium-term view. Ovum forecasts that revenues from superhighway applications will reach US$185billion by 2005, with both residential business users coming to rely on the superhighway for information and entertainment.

Contact: Ovum, Tel: (0171) 255 2670.

Survey Shows Internet Expansion

Britain will soon have at least one cyber cafe, pub or bookshop in every major city. According to a survey published in the latest issue of Internet magazine, there are now 25 cyber cafes, pubs and bookshops in Britain, that offer pay-as-you-go access to the Internet. They have all opened less than a year after the appearance of the first Cafe Cyberia in London. The magazine also reveals that there are now 82 commercial Internet access providers in the UK – up from less than a dozen a year ago.

Contact: EMAP Computing, Tel: (0171) 208 5157.

Site Survey

The month's destinations

This month's best Internet sites. Some of the best sites around are being developed by UK universities. It is, after all, a fact that the Internet was originally developed (along with the US Defense departments) by academia, so it's no real surprise to learn that universities over here are getting in on the act in a big way now too. Generally, the universities have worldwide web home pages, and quite often (although there are exceptions) can be found with the typical universal resource locator: **http://www.xxx.ac.uk/**

Where *xxx* is the abbreviation adopted by the particular university, *ac* describes it as an academic site, and *uk* shows it's in the UK, of course. So, Warwick University has the home page at: **http://www.warwick.ac.uk/**

While Cambridge University's URL (well, the Computer Laboratory's, anyway) is found at: **http://www.cl.cam.ac.uk/**

And the Open University's URL is: **http://www.open.ac.uk/**

The screenshots (right) show examples of pages found at these sites.

Academia can bring many more rewarding trips on the Internet, too. The Royal Observatory in Edinburgh has a home page at: **http://www.roe.ac.uk/** – which gives many hyperlinks around the world to other astronomy-related sites. Worth a look-see, indeed.

The Natural History Museum is up on the web, too, at: **http://www.nhm.ac.uk/** where you'll find loads of links and information about its work. University and academic sites are now so prolific, it's worth trying the generic URL above, simply inserting the likely abbreviation for the university you want. Chances are, you could find a gold-mine of information.

On a galactic front, we chanced across NASA's Magellen space probe site at: **http://www.jpl.nasa.gov/releases/mgnlpsc.html**

This is located at the Jet Propulsion Laboratory, where you'll find large images of the Venusian landscape, sent back by the space probe last October. Be prepared for a long wait, though, if you want to download the high resolution versions of the images, because they average around 40M-bytes of data. Even the low resolution screen images are well over 20K-bytes. Worth it though, if you're a space freak!

GETTING THE LOW-DOWN ON THE TOWER

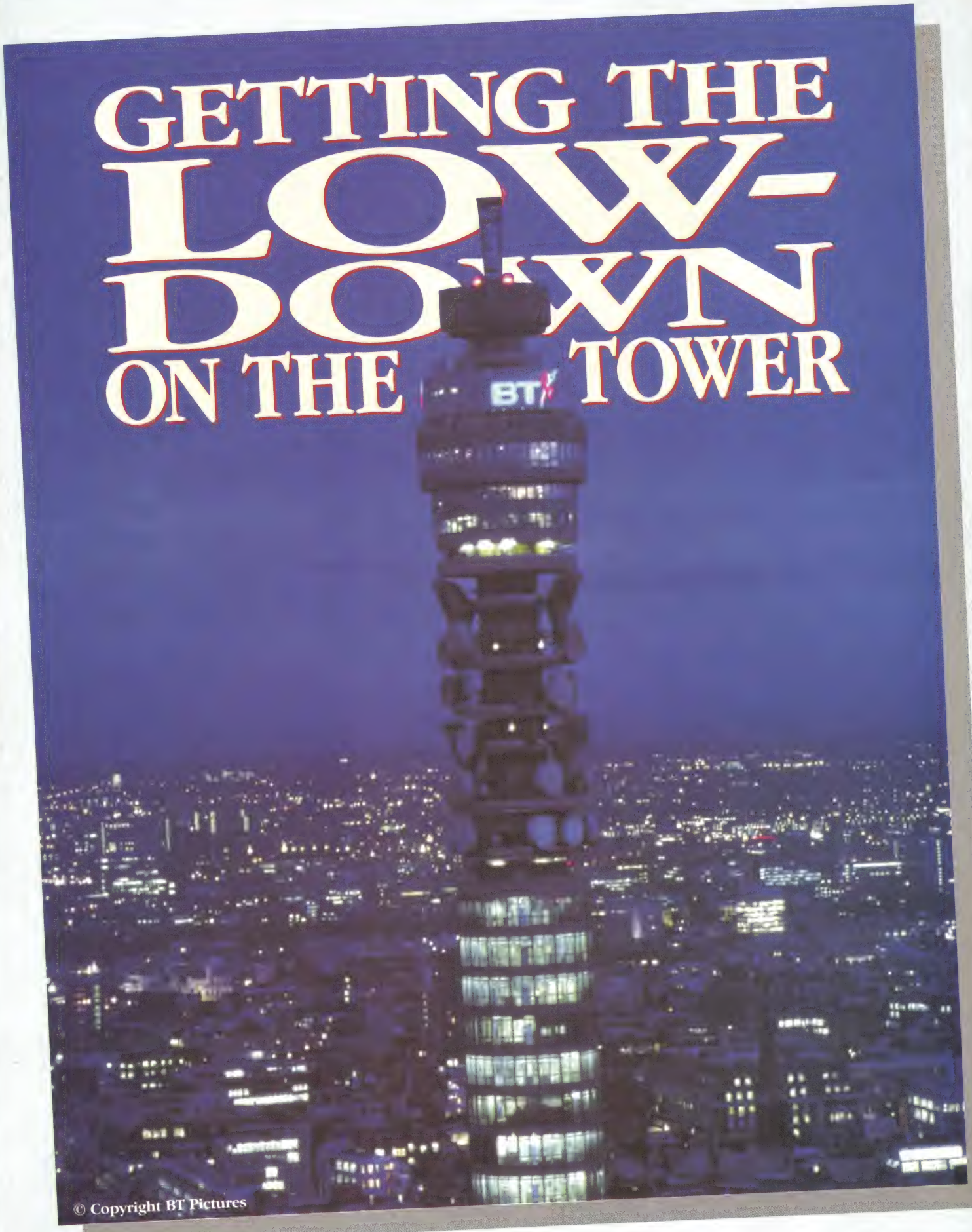

© Copyright BT Pictures

Earlier this year, when the BT Tower was illuminated in a blaze of red, white and blue to celebrate the official VE-Day commemorations, it acted as the first of a chain of beacons across the land. The first time that the BT Tower was illuminated was back in 1990 to celebrate the change of London's dialling code, perhaps understandably, lights were not switched on to 'celebrate' the further code changes imposed on us by the telecoms watchdog, OFTEL, last Easter. Report by Alan Simpson.

As a landmark, the BT Tower is unmistakable. As a centre of high-technology, the Tower is essential. Without the BT Tower, you wouldn't be able to see your favourite TV programmes or live news action of events unfolding around the world, nor would you be able to watch great sporting matches – whether tennis from New York or Formula One racing from the South of France.

In fact, apart from being a beacon dwarfing all other central London buildings, the BT Tower is the nerve centre of a vast broadcasting and communications network. This includes being a giant telephone exchange that can connect you with friends, relatives and business associates worldwide, and of course, it enables not only individuals, but computers, to talk to each other.

Tower of Babel

The BT Tower (the centre of BT's transmission network) stands a breathtaking 189m – some 620 feet – above the streets of central London, and has the transmission capacity equal to 20,000 simultaneous telephone calls or 110 TV channels.

The Tower is located in a part of central London that was once known as Fitzrovia, best known in the 18th and 19th Centuries, when the area hosted a galaxy of artists and writers. The Tower site was originally designated by the GPO in 1936, but the legal process involved in buying out over 40 freeholders had not been completed when the Second World War broke out in 1939, calling a temporary halt to the building proceedings.

Originally, the location was to have been shared for telephone and postal use. However, post-war planning suggested a tremendous upsurge in demand for telephony services, and it was decided not to include postal facilities at the site. Work commenced on the Tower in April 1961, and opened for business on 8th October, 1965. In the process, the developers had to contend with a far from welcoming comment from the Royal Fine Arts Commission who deplored the effect that the proposed tower would have on buildings (such as St. Paul's Cathedral, when viewed from Hampstead Heath). But, as BT points out, times change, and the Tower which cost £2·5 million to construct, is now listed as a building of merit.

Growth by Design

At first, the Tower was going to be a simple stalk – just 111m high. But inevitably, engineers keep wanting to add on more equipment, and the building grew to its present height (equivalent in length to a line of 25 double-decker buses parked nose to tail). Shape-wise, the developers flirted with the idea of having a square tower. However, to combine consistency of form with maximum visual slenderness (and to offer the minimum wind resistance) a circular design was implemented. Being circular meant that it would be easier to align the aerials in any direction required. Before commencing construction, months of calculations and wind tunnel testing at the National Physical Laboratory took place, until all concerned were satisfied that the design was safe and sound.

High Expectations

Challenges followed thick and fast. A borehole survey of the Tower site had revealed a tricky problem. There was hard chalk suitable for supporting foundations beneath the blue London clay, but it was 53m down. To have sunk metal piles and plates that deep in the conventional manner would have been a lengthy and difficult operation. So, it was decided to look for an alternative way of supporting the massive 13,000 tonne structure.

Fortunately, an Italian company called ICOS came to the rescue. The company laid a concrete raft on the clay, some 8m below ground level. The raft measures around 27m^2, is 1m thick, and reinforced with six layers of steel cables. On it, sits a 7m tall reinforced concrete pyramid with a flat top. The raft and the pyramid together provide the foundations, and on top of them, hollow reinforced concrete runs from near enough ground level, right up through the centre of the Tower. This acts as the backbone of the whole structure, which, together with a collar connecting it to the adjacent four-storey building, gives the Tower its stability.

Thanks to the climate, in the winter, the Tower can be as much as 23cm shorter than it is in the summer. A further characteristic of tall buildings is that they sway from side-to-side in the wind. So as not to affect the accuracy of the microwave radio transmissions, the Tower is designed to sway much less than most high-rise structures – up to 20cm from the vertical, to be precise.

Key Role

At the last count, there were almost 60 microwave radio aerials on the BT Tower. There are also some redundant satellite dishes residing atop the Tower. Retrieval procedures being somewhat difficult, they may well spend the rest of their days overlooking a view second to none in London.

The BT Tower is used by all the television broadcasters – including the 15 ITV companies, cable television, and the BBC, in the transmission and switching of their programmes. The role of the Tower is to send the right programmes to the right ITV transmitters, or to the Intelsat or Astra satellites at the right times. The transmitters or satellites then beam out the programmes, which are either picked up by roof-top aerials or distributed through local cable networks. Although the BBC send out their own programmes to their own transmitters, they still utilise the Tower microwave radio network.

Getting the Message

The BT Tower is the main link in a nationwide network of microwave radio towers. It sends and receives microwaves along four main paths: one to Birmingham and the North, connecting up with the BT earth satellite station in Aberdeen; another to Southampton, Bristol and the West, connecting up with earth stations at Goonhilly in Cornwall and Madley in Herefordshire; a third to Dover and the Continent; and the fourth to Norwich and the North East. The Tower is connected to the other BT earth satellite station, the London Teleport in Docklands, by cable.

Satellite technology allows BT to send live and recorded TV material all over the world – and to receive it from other countries. For example, pictures arrive through Goonhilly, after it has picked up the transmissions from Intelsat and forwarded them to the Tower by microwave radio, from where they are distributed throughout the UK, again by microwave – all in the blink of an eye. Many news networks maintain 24-hour satellite links with the USA through the Tower, while smaller foreign news agencies book satellite space through the Tower whenever required. These slots are allocated on a first-come, first-served basis.

High-Tech at a High Elevation

The first 16 floors of the Tower contain radio equipment, a ventilation and refrigeration plant, and power units. These floors are glazed in a special glass that lets the light in, but keeps the heat from the sun's rays out. This gives the building its greenish colour. Next come the horn- and dish-shaped microwave radio aerials, which are housed in an open section between 110 and 145m. Above these aerials are another six floors, containing the presentation and function suite, kitchens, and more technical apparatus. Higher still, are the lift motors and water tanks. And crowning it all, the lattice aerial.

As a matter of reassurance to avid watchers of Coronation Street, all essential plant is backed up by uninterruptable power supplies – alternators, permanently charged up by the mains, that cut in the instant power is lost. If necessary, these alternators would keep the Tower up and running for at least an hour – time enough, presumably, for the five stand-by diesel generators to kick-in, with fuel supplies which will keep essential services going for up to 20 days.

Beam Me Up!

The two lifts in the BT Tower are among the fastest in Europe. They travel at an incredible 6m/s, and take just over 30 seconds to whiz to the top. Here, the Presentation Suite (site of the original revolving restaurant) is the widest part of the Tower, with a total diameter of almost 20m. The revolving part is just over 3m wide, runs on nylon-tyred wheels on circular rails, completes a full circle every 22 minutes, and weighs 30 tonnes. The precision of the rotating mechanism is such that there is a clearance of less than 0·33cm between the moving and stationary sections.

During the first year that the Tower was open to the public, the lifts travelled 70,000km between them, carrying nearly 1 million visitors, over 100,000 of whom dined in the revolving restaurant at four shillings (20p) a head. The total number of visitors to the Tower up to 31st October 1971, was a staggering 4,632,822 – making it one of London's most popular tourist attractions. However, on that fateful day, a bomb which had been hidden in a washroom exploded, although no-one was injured in the blast. Restoration work took nearly two years to complete, and the decision was made to close the Tower to the public. Today, you can only visit the Tower by special invitation.

ELECTRONICS
The Maplin Magazine
has got an invitation for you! Win our easy-to-enter contest, and you and your partner will find yourselves having 'Lunch at the Top of the Tower', as guests of BT. So don't delay, enter the BT Tower contest today!
See page 76.

Exclusive ELECTRONICS

BT Tower Competition

Let Electronics Take You to Dinner at the top of the Tower

All you have to do to enter is to correctly answer all four questions and send your answers on a post card or on the back of a sealed-down envelope to: **BT Tower Contest, The Editor, *ELECTRONICS – The Maplin Magazine*, P.O. Box 3, Rayleigh, Essex SS6 8LR.**

Your answers must be received by 31st December 1995. A table for two at the Top of the BT Tower has been reserved for Saturday, 20th April 1996. The winner must take the prize lunch on the specified day – no changes can be made. Good luck and happy eating!

Please note that employees of Maplin Electronics, associated companies and family members are not eligible to enter. In addition, multiple entries will be disqualified. The prizes will be awarded to the first all-correct entries drawn. The Editor's decision will be final.

Competition Questions

1. How many countries worldwide does the BT Network span?
(a) 230.
(b) 33.
(c) 34.
(d) 35.

2. How many local, national and international telephone calls does BT handle a day?
(a) One million.
(b) Ten million.
(c) One hundred million.
(d) Countless.

3. 2,000 red BT telephone boxes have been designated as:
(a) Emergency government nuclear fall-out shelters.
(b) Grade II listed buildings by the Department of National Heritage.
(c) Back-up Dr. Who mobile transit units.
(d) Rest homes for badgers.

4. The first BT outside broadcast was for:
(a) The coronation of King George VI in 1937.
(b) The first landing on the moon by man.
(c) The first issue of *Electronics – The Maplin Magazine*.
(d) The first opening of Tower Bridge.

NEXT issue

There are more terrific projects and features heading your way soon in next month's super issue of *Electronics – The Maplin Magazine*, including:

PROJECTS

In the December issue (No. 96) of *Electronics*, there is an interesting assortment of projects planned, comprising the Rear Window Demister Aerial, a clever project that will allow optimum reception from your car radio without the need for an unsightly and vulnerable conventional rod antenna – perfect for discerning motorists who do not wish to drill holes in their vehicle's bodywork just to fit an aerial – instead, this circuit employs the rear window demister element as the aerial, without upsetting its heating action! The Video Digitiser comes in the form of a card and Windows™ software, which when installed into an IBM-compatible PC, allows for the real-time, high quality conversion of video signals from a TV tuner, camcorder, VCR, etc., into digital data that can be processed by the PC, namely, TIFF (Tagged Image File Format) output files. The Video Kaleidoscope is an updated version of the popular TVFX kit, using PIC microcontroller-based circuitry, to electronically generate patterns on a TV screen in response to the sound picked up by either the built-in microphone, or from an external audio input. Thus, the patterns could be produced to match the beat of the music (brilliant for parties, discos, or merely attracting attention!), or at a pre-determined, manually controlled rate, courtesy of a speed control. The Voice Modulator is a simple-to-build but effective project that uses a purpose-made, sophisticated DSP chip to transform any incoming voice signal (from either microphone or line inputs) into a fascinating, robotized, metallic version of the original, that can also be pitch-shifted and modulated with a vibrato-effect! Finally, Light-sensitive Battery Saver, by John Woodgate, is an add-on circuit for existing battery-powered equipment, that will automatically switch off the device when the ambient light level falls below a preset level, such as when you put the unit back in its box or drawer.

FEATURES

We have several very interesting features scheduled for this issue, kicking off with Optical Computing, by Douglas Clarkson, which describes how a new generation of super-fast computers will be using optical transmission of data between its sub-sections as opposed to the more normal wire interconnections, to avoid the present limitations in operating speed, problems of crosstalk, resistance and unreliable contacts. Frank Booty provides an article on Technical Network Management, concerning techniques for making the most of intricate computer networks, ranging from small single vendor versions to those crossing national and even international boundaries, and describing the complex protocols involved to ensure successful operation. The London Planetarium, from Alan Simpson, describes the technological goings-on behind the spectacular scenes at this tourists' and astronomers' favourite City attraction, for which you can win tickets in our Planetarium Contest. About Time, by Maurice Hunt, prises the backs off electronic watches and clocks for a look inside to see what makes them tick, and looks ahead in time to describe future developments in timepiece technology, appearing on a wrist, wall or mantelpiece near you soon!

All this, plus all your favourite regulars as well!

Reserve a copy at your newsagents or take out a subscription NOW to avoid disappointment!

ELECTRONICS – THE MAPLIN MAGAZINE

BRITAIN'S BEST SELLING ELECTRONICS MAGAZINE.

MAPLIN

SOUTH AFRICA

Calling all customers in Southern Africa...

R39,95 from any branch of CNA or by Mail Order from Maplin South Africa

. . . your new 1996 Maplin Catalogue is now available.

Maplin South Africa (Pty) Ltd.
P.O. Box 1846, Somerset West, 7129, RSA
Telephone:(024) 515124 Fax:(024) 515127

TECHNICAL INFORMATION SERVICES

76 Church Street, Larkhall, Lanarks, ML9 1HE
Tel: (01698) 883334 Fax: (01698) 884825
Technical Help Line (01698) 884585

We have the World's Largest Selection of:

SERVICE MANUALS CIRCUIT DIAGRAMS

We also have 100s of Titles on TVs, VCRs, Satellites, Midi Systems, Computers, Test Equipment, etc...
Please Phone or Send an SAE for FREE QUOTE & CATALOGUE of Publications

ELECTRONICS *The Maplin Magazine*

INDEX

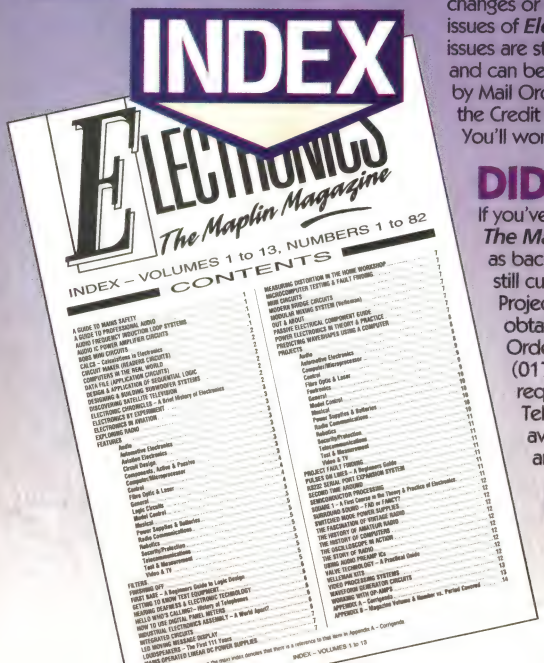

A comprehensive index to ***Electronics – The Maplin Magazine*** is now available from Maplin. The index covers every issue from December 1981 to October 1994. Included are details of every article, series and project published during that period. Conveniently arranged, sectionally and alphabetically, it'll take minutes instead of hours to find the exact issue number and page you need. You'll be able to rediscover a wealth of information you never knew you had! A list of all the ***Corrigenda*** published is also included, so you will be able to find details of changes or amendments. You'll find the index an invaluable addition to the issues of ***Electronics*** that you have. If your collection is incomplete, many issues are still available as back issues. The Magazine index costs just 80p *NV* and can be obtained (subject to availability) from Maplin Stores countrywide; by Mail Order, using the Order Coupon in this issue, or by calling the Credit Card Hotline, Tel: (01702) 554161, Order As XU87U. You'll wonder how you ever managed without it!

DID YOU MISS US ?

If you've ever wanted to lay your hands on an elusive issue of ***Electronics – The Maplin Magazine***, then we can help! Many editions are still available, as back issues. Where issues are out of print, details of projects that are still current can be found in Maplin Projects Books and Best of Maplin Projects Books. Copies of back issues (subject to availability) can be obtained from Maplin Stores countrywide; by Mail Order, using the Order Coupon in this issue, or by calling the Credit Card Hotline, Tel: (01702) 554161. If you are not sure which issue or Projects Book you require, refer to the Magazine Index (XU87U) or call Customer Services, Tel: (01702) 552911. Photocopies of out of print feature articles are available; a charge will be made, dependent on the length of the article to be copied – call Customer Services for details.

NO HANDLING CHARGES !

If you are *only* ordering a copy of ***Electronics – The Maplin Magazine*** Index or back issues of the magazine, the normal £1.55 Mail Order handling charge does not apply!

These descriptions are necessarily short. Please ensure that you know exactly what the kit is and what it comprises before ordering, by checking the appropriate issue of *Electronics* referred to in the list.

The referenced back-numbers of *Electronics* can be obtained, subject to availability, at £2.10 per copy.

Carriage Codes – Add; A: £1.60, B: £2.30, C: £2.90, D: £3.40, E: £4.00, F: £4.70, G: £5.50, H: £6.00.

DID YOU MISS THESE PROJECTS?

The Maplin 'Get-You-Working' Service is available on all of these projects unless otherwise indicated.

To order Project Kits or back-numbers of *Electronics*, 'phone Credit Card Sales on (01702) 554161. Alternatively, send off the Order Coupon in this issue or visit your local Maplin store.

Maplin: The Positive Force In Electronics

All items subject to availability. Prices include VAT. E&OE

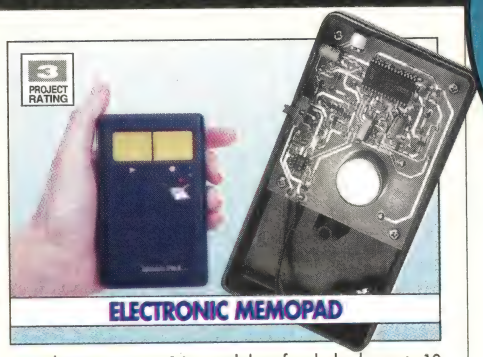

ELECTRONIC MEMOPAD

Record messages up to 16 seconds long for playback – up to 10 years later! Ideal for memos and messages in the office or home, and a boon to the blind, partially-sighted, and anyone with reading or writing difficulties.

Order as: LT79L, **£29.99**. Details in *Electronics* No. 87, March 1995 (XA87U).

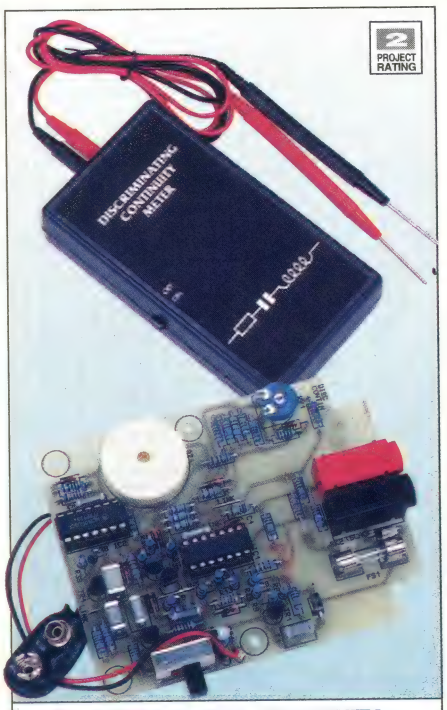

DISCRIMINATING CONTINUITY & LEAKAGE TESTER

Test for more than just 'Go' or 'No go' conditions with this ingenious tester. A variety of sound outputs of varying pitch and duration allow you to differentiate amazingly accurately between a good connection and a high resistance one, test for leakage, and check both passive components and semiconductors.

Order as: LT78K, **£19.99**. Details in *Electronics* No. 87, March 1995 (XA87U).

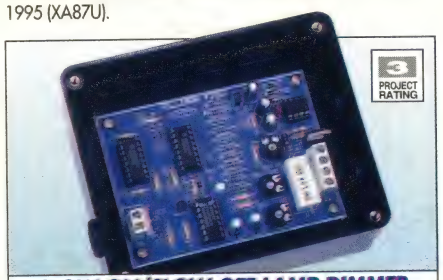

SLOW ON/SLOW OFF LAMP DIMMER

Look – no hands! Instead of the normal manual control, this dimmer uses two variable timers to slowly increase or decrease the level of light. Both the 'on' and 'off' timers are variable from 1 second to 30 minutes. Ideal lighting control for slide/film shows, and as a gently reducing 'slumber' switch.

Order as: VE51F, **£15.99**. Details in *Electronics* No. 87, March 1995 (XA87U).

SOUND ACTIVATED FLASH TRIGGER

Produce exciting pictures of darts bursting balloons, bullets passing through light bulbs, etc., with this inexpensive flash trigger. The sound of mum's best bone china hitting the floor triggers the unit which operates your flash-gun in time to photograph the bits whilst still in mid-air.

Order as: LT86T, **£14.99**. Details in *Electronics* No. 89, May 1995 (XA89W).

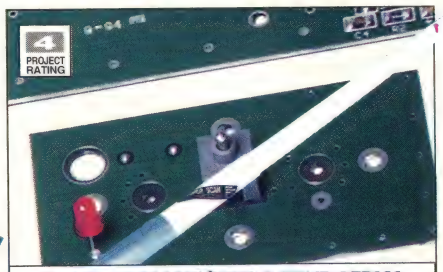

SUPER SCAN HF/VHF ACTIVE AERIAL

Improve your scanner's reception with this active, broadband aerial. The aerial supplied with most scanners is perfectly adequate for local reception, but a significant improvement can be made in the reception of long distance (DX) and weaker stations by using a fixed, active aerial like the Super Scan. (Plastic aerial housing and PSU box not included in kit.)

Order as: LT27E, **£29.99**. Details in *Electronics* No. 89, May 1995 (XA89W)

VOICE VANDAL

Create your own distortion effects and 'alien' voices with this entertaining audio project. Both music and voices can be 'vandalised' by pitch changing, clipping and echo effects. Ideal for plays, amateur dramatics or just for fun. Dad's Max Bygraves collection will never sound the same again! (Case not included in kit.)

Order as: LT82D, **£29.99**. Details in *Electronics* No. 89, May 1995 (XA89W).

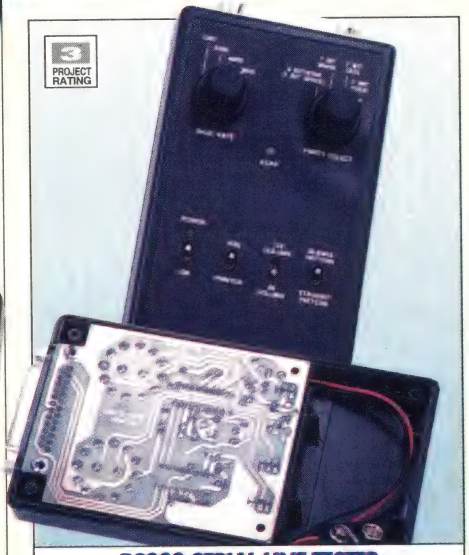

RS232 SERIAL LINE TESTER

Troubleshoot RS232 equipment quickly and conveniently with this battery powered, hand-held tester. The tester produces a short RS232 message and is ideal for checking terminals, printers, and other serial equipment, as well as their interconnecting data cables.

Order as: LT83E, **£32.99** A1. Details in *Electronics* No. 89, May 1995 (XA89W).

ULTRASONIC DETECTOR

3 PROJECT RATING

Bats in the belfry? Noisy mechanical bearings? Not sure if your dog-whistle works? This novel project converts ultrasonic sounds into audible sounds enabling them to be heard by the human ear. Other applications include testing of ultrasonic remote control units and ultrasonic alarm detectors.

Order as: 90008, **£39.99** A1. Details in *Electronics* No. 90, June 1995 (XA90X).

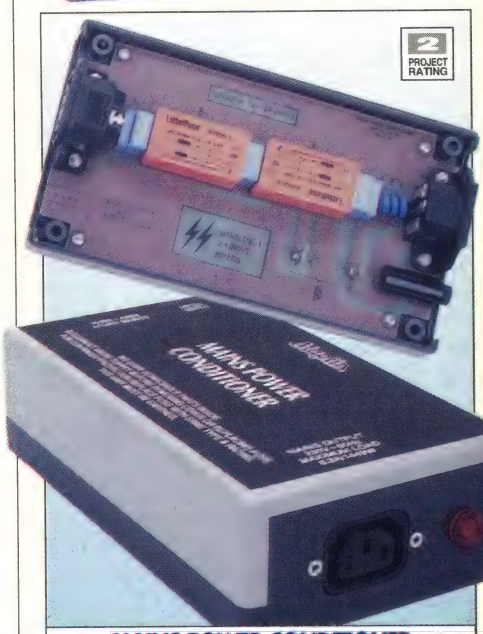

MAINS POWER CONDITIONER

No, it won't make piles of towels all soft and fluffy, but it will help to remove spikes, transients and noise from the mains supply, which could otherwise upset sensitive equipment like computers, TVs, Hi-Fis, test gear and communications equipment.

Order as: 90019, **£32.99** A1. Details in *Electronics* No. 91, July 1995 (XA91Y).

These descriptions are necessarily short. Please ensure that you know exactly what the kit is and what it comprises before ordering, by checking the appropriate issue of *Electronics* referred to in the list.

The referenced back-numbers of *Electronics* can be obtained, subject to availability, at £2.25 per copy. (Issue 93 £2.10).

Carriage Codes – Add; A: £1.60, B: £2.30, C: £2.90, D: £3.40, E: £4.00, F: £4.70, G: £5.50, H: £6.00.

DID YOU MISS THESE PROJECTS?

The Maplin 'Get-You-Working' Service is available on all of these projects unless otherwise indicated.

To order Project Kits or back-numbers of *Electronics*, 'phone Credit Card Sales on (01702) 554161. Alternatively, send off the Order Coupon in this issue or visit your local Maplin store.

Maplin: The Positive Force In Electronics

All items subject to availability. Prices include VAT. E&OE

CW FILTER

A very useful add-on continuous wave (CW) peak filter circuit for basic shortwave receivers, which helps to separate closely bunched Morse CW signals and cut out the 'unwanted' ones. The unit operates from 11 to 15V DC and is small enough to fit inside many existing receivers.

Order as: 90045, **£4.99.** Details in *Electronics* No. 93, September 1995 (XA93B).

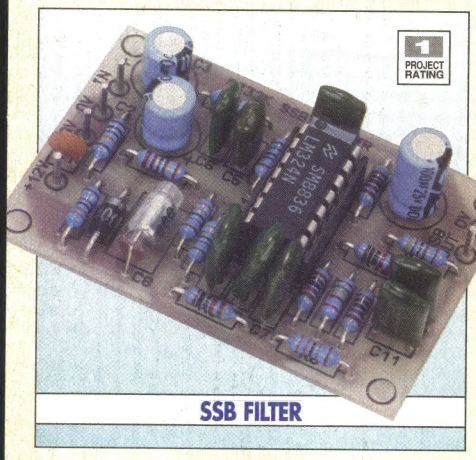

Improve the reception of individual short-wave stations from amongst a group of 'overlapping' ones with this easy-to-build single sideband filter. The bandwidth of the filter is approximately 250Hz to 3200Hz and the circuit employs an active 8-pole Chebyshev filter.

Order as: 90057, **£4.99**. Details in *Electronics* No. 94, October 1995 (XA94C).

A compact, efficient Teletext decoder with Windows™ driven, mouse-controlled software. Use in conjunction with a suitable TV tuner module, e.g. the PC Teletext Decoder Tuner Module, 90037, to display or store Teletext on your PC. Fits directly into a PC expansion slot.

Order as: 90035, **£69.99 C1**. Details in *Electronics* No. 94, October 1995 (XA94C).

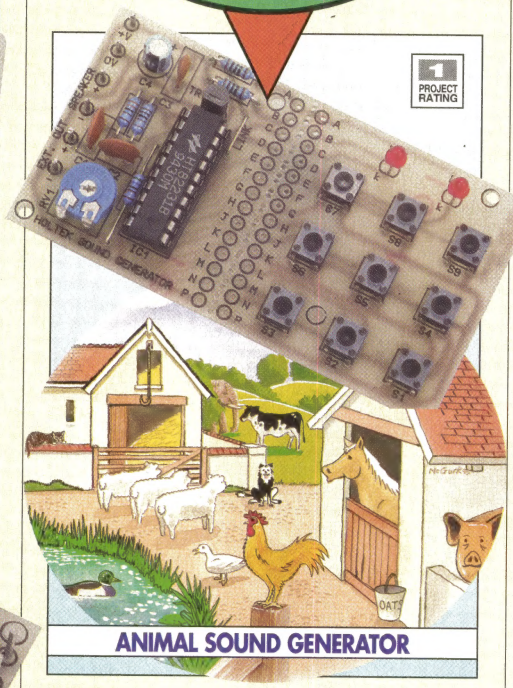

An electronic farmyard of 12 animal sounds at the push of a button, without the usual accompanying smells, or mess to clear up! Ideal for toys, games, doorbells, plays, etc. Nine push-buttons select pig, cow, cockerel, hen, frog, sheep, cat, horse and a 'medley' of elephant, dog, bird, duck, plus all the other sounds in sequence.

Order as: 90033, **£6.99**. Details in *Electronics* No. 93, September 1995 (XA93B).

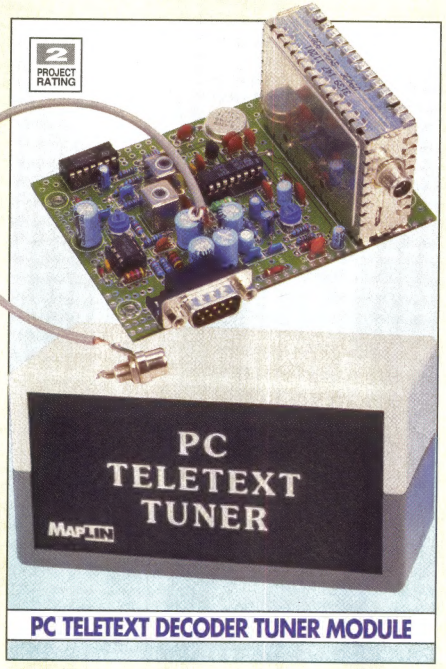

A voltage-controlled tuner module, ideal for use with the PC Teletext Decoder Interface Card, 90035. Also an excellent TV 'building-block' as the unit receives the entire TV colour video signal.

Order as: 90037, **£29.99**. Details in *Electronics* No. 94, October 1995 (XA94C).

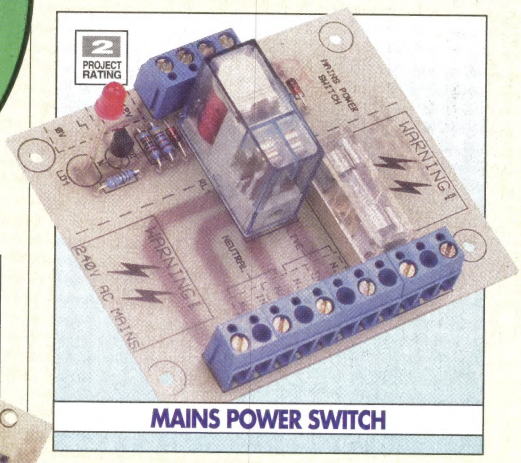

Give power to the elbow of your low-voltage projects, etc., by enabling them to control mains-operated equipment. This versatile, low-cost project can safely switch 230V AC mains equipment up to a maximum current of 5A (resistive). The versatile inputs give the option of either low-voltage (9 to 15V DC) or an open or closed contact. Order as: 90043, **£6.99**. Details in *Electronics* No. 93, September 1995 (XA93B).

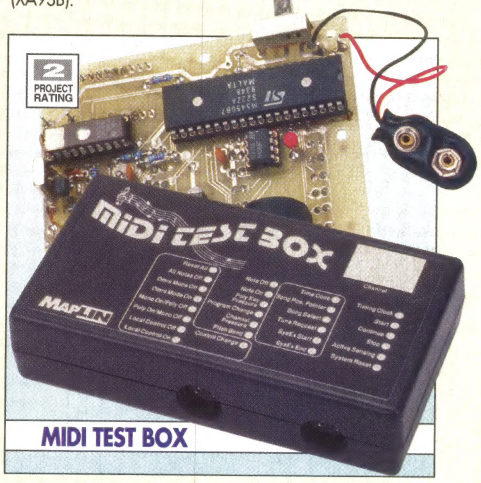

Troubleshoot MIDI (Musical Instrument Digital Interface) equipment with this comprehensive Test Box. Features include LED display of channel and status, 'hidden' codes and mismatches. The unit is lightweight and compact and can be battery or mains operated. Ideal for bands, service engineers and musical instrument traders.

Order as: 90050, **£39.99** A1. Details in *Electronics* No. 94, October 1995 (XA94C).

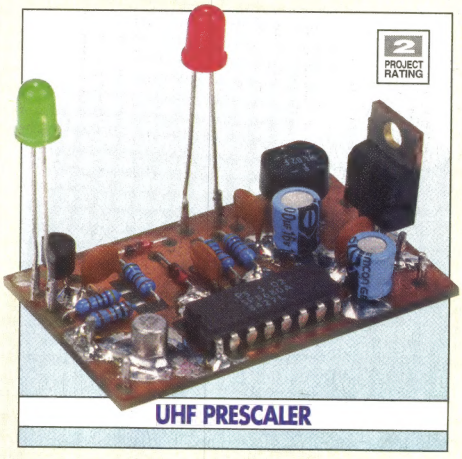

Extend the range of your digital frequency meter, possibly up to 650MHz with this calibration-free unit. Extends by a factor of 10 the useful range of older or low-specification equipment or Digital Multimeters with limited frequency capabilities.

Order as: 90055, **£18.99**. Details in *Electronics* No. 94, October 1995 (XA94C).

All of the books featured on this page are available from Maplin Regional Stores and by Maplin Mail Order. To find your nearest Maplin Regional Store Tel: (01702) 552911 or to order call the Credit Card Hotline on Tel: (01702) 554161

NEW BOOKS

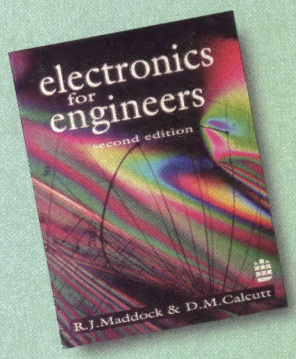

Electronics for Engineers – Second Edition

by R. J. Maddock and D. M. Calcutt

This book provides a comprehensive guide in electronics, spanning the range of subjects covered by engineering students to higher technician and first degree level. Most of the modern digital and analogue syllabus from ONC and HNC electronics courses is covered, in addition to a great deal of first degree level content. There is much emphasis on new technology and analytical methods, ideal for those wishing to upgrade their knowledge gained from dealing with older generation ICs to the newly introduced types. In-depth investigation into circuit theory and operation helps to impart know-how of the way in which a particular circuit will respond. Summaries are provided at the end of the chapters, together with worked examples and problem-solving exercises. A good source of information for students, with numerous diagrams and illustrations.

719

1994. 240×190mm. ***Order As 95005 (Elects For Engineers) £21.99 NV***

WINDOWS '95 FOR DUMMIES QUICK REFERENCE

by Greg Harvey

Launched recently amidst a storm of publicity, Microsoft's Windows '95 operating system looks set to become the most popular type of computing environment, so now is undoubtedly the time to familiarise yourself with the various aspects of getting the best out of this system, not to mention getting your money's worth from it. This is where this book comes in, providing a quick and friendly way to learn and remember Windows '95 features and commands. The latest version of Windows is covered, and the book is loaded with helpful icons and plain English explanations, doing away with the confusing techno-babble often seen elsewhere.

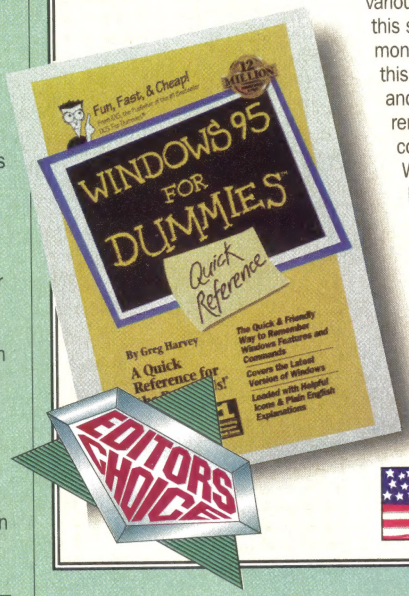

1995. 234×188mm. ***Order As 95009 (Win 95 Dumm Quck Ref) £8.99 NV***

The Desktop Musician

by David M. Rubin

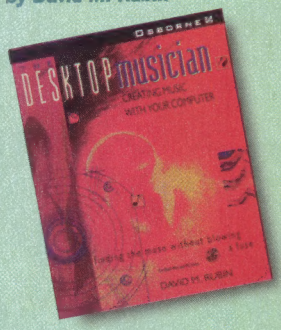

Aimed at beginners as well as accomplished musicians, this easy to follow book, as the title implies, explains the concepts behind composing music on your desktop, courtesy of your PC or Macintosh computer. Commence with the fundamentals of producing electronic music, then delve into the hidden delights of MIDI systems, sequencers, notation software, interactive composition programs, audio editors, and much more besides. This clearly presented book will instruct you about the hardware components of your MIDI system and instruments, and describes how to go about setting up a music workstation. Reviews are provided of the most popular sequencers, with a handy guide as to which items of kit to buy to gain the best setup. Also described, is how to create orchestral and big band compositions in a wide range of playing styles using synthesizers, and which software programs are available to help you create good electronic music.

430

1995. 230×188mm. ***Order As 95007 (Desktop Musician) £25.95 NV***

Electronic Board Games

by R. Bebbington

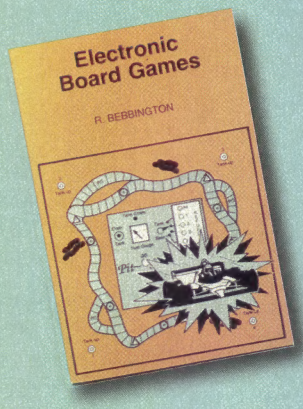

This handy little book contains a selection of 20 of the most popular novelty electronic games projects. The variety of electronic components used for the circuits means that many different constructional skill levels are catered for, and the games can be constructed on either strip or breadboard, to produce working circuits in minutes. By using safe components and low voltages, these projects are suitable for the young. The book is easy to read, and each separate game project is in a different chapter to keep all the relevant information together. A full component listing details all the required parts, their values and circuit references. A great book for introducing first-timers to electronics, and providing amusement for other constructors.

132

1994. 178×110mm. ***Order As 95008 (Elect Board Games) £4.95 NV***

Lighting the Stage

by Francis Reid

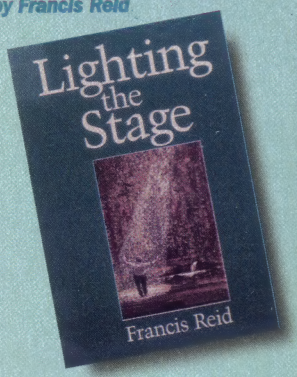

Unlike previously published books on stage lighting, which have tended to concentrate on the actual aspects of stage design and technology, this book approaches the subject from the human angle. Instead, this book is concerned with the relationships between people involved in stage lighting, and how they fit into the creative team, to get the best effects from stage productions. Written in an easy and informal style, the author draws on his many years of experience as a lighting designer and teacher, to pass on tips and pointers which will interest and stimulate all those involved in stage design, and theatre in general.

125

1995. 233×155mm. ***Order As 95006 (Lighting The Stage) £12.99 NV***

British Book | American Book | European Book | Illustrated | Softback | Hardback | 258 Number of Pages

BIG SAVINGS for SUBSCRIBERS!

That's right, if you subscribe to *Electronics–The Maplin Magazine*, or take out a subscription NOW, you will qualify for these amazing savings!

Hurry! Offers end 4th November '95

SAVE £5

Code 51079

Automatic CD Cleaner

Catalogue Price £14.99

SUBSCRIBERS' PRICE £9.99

SAVE £3

Code 51075

Casio Students Calculator

Catalogue Price £7.99

SUBSCRIBERS' PRICE £4.99

Subscribe NOW! see page 38 for details

Code 51077

SAVE £3.50

LCD Thermometer Clock

Catalogue Price £6.99

SUBSCRIBERS' PRICE £3.49

Code 51076

SAVE £7

Geemarc Europa Cordless Telephone

Catalogue Price £49.99

SUBSCRIBERS' PRICE £42.99 B1

Add UK Carriage £2.30

Rechargeable Lantern

Catalogue Price £24.99

SUBSCRIBERS' PRICE £12.49

SAVE £12.50

Code 51078

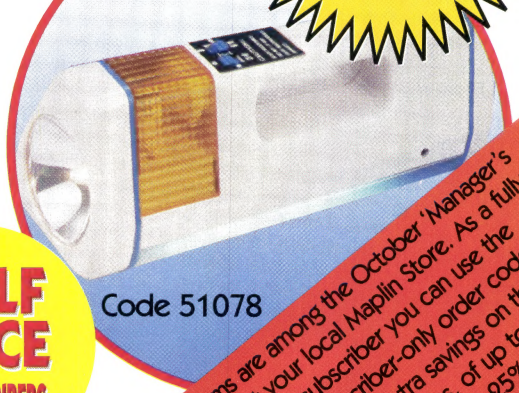

HALF PRICE TO SUBSCRIBERS

These items are among the October 'Manager's Specials' at your local Maplin Store. As a fully paid-up subscriber you can use the special Subscriber-only order codes and make extra savings on the shop prices, of up to A FURTHER 25%

When ordering, please quote your Subscribers' Membership number (phone enquiries on 01702 552911 if not sure) and the special order code number. All items are subject to availability. Prices include VAT. Catalogue prices refer to the 1996 Catalogue. Overseas subscribers ring +44 1702 554155 Ext. 326 for carriage charges. Normal UK mail order carriage charges apply. E&OE.

With over 14,000 products the new Maplin Catalogue is now bigger than ever

THE EIFFEL TOWER

Built in 1889 by Alexandre Gustave Eiffel, the Eiffel Tower is 984 feet high and gives an unrivalled view of the whole of Paris.

THE NEW MAPLIN CATALOGUE

Built for 1996 by Maplin, the new catalogue is almost 1,200 pages long and gives an unrivalled view of the whole world of electronics.

Now Only £2.95

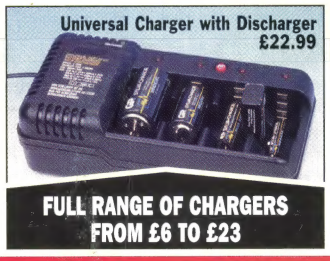

JUST LOOK AT THESE SUPERB EXAMPLES!

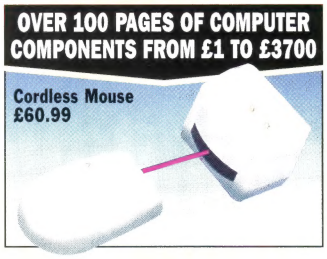

MAPLIN
ELECTRONICS AND BEYOND

Get your copy now from WH SMITH, John Menzies and Maplin stores nationwide

Or order direct NOW on 01702 554161

Catalogue Mail order Price £3.45 (inc p&p). Prices refer to the 1996 Maplin Catalogue and are inclusive of VAT. All items are subject to availability. E&OE. Maplin Electronics, P.O. Box 3, Rayleigh, Essex, England SS6 8LR.

Catalogue available in Southern Africa from CNA or direct from Maplin SA (024) 515124. R39,95 (inc p&p).